VANAIR® USERS GUIDE

AIR N ARC® 330 DIESEL

ALL-IN-ONE Power Systems®

Welding Performance by LINCOLN® ELECTRIC

AIR N ARC® ALL-IN-ONE POWER SYSTEM® • 40 CFM • 60 CFM • 10 kW • 330A • WELDER • GENERATOR • AIR COMPRESSOR • BATTERY CHARGER/BOOSTER • BOLT-ON FRAME

OPERATION MANUAL AND PARTS LIST

NOTE

Use only Vanair® Vanguard™ Compressor Oil and Genuine Vanair® Parts. Inspect and replace damaged components before operation. Substituting non-Vanair® oil or non-genuine Vanair® filter components WILL VOID THE COMPRESSOR WARRANTY!

⚠ DANGER

DO NOT OPERATE IN AN ENCLOSED SPACE.

Running any combustion engine in an enclosed space will result in Carbon Monoxide (CO) poisoning and may cause overheating, which may result in fire and/or explosion.

CO build-up can cause death!

Overheating can ignite surrounding materials resulting in fire and/or explosion which may cause injury, death and equipment damage.

IMPORTANT

An enclosed space refers to any area partially or fully enclosed by walls, a roof, or other boundaries.

These spaces can limit natural ventilation, restrict airflow, trap hazardous gases, and increase the risk of heat build-up, fire, or explosion.

It is the responsibility of the installation party to determine and mount Vanair® engine-driven equipment in a way that ensures proper airflow and ventilation for safe operation. Failure to provide proper ventilation and clearances may result in hazardous conditions.

Vanair® assumes no responsibility or liability for installations it did not perform.

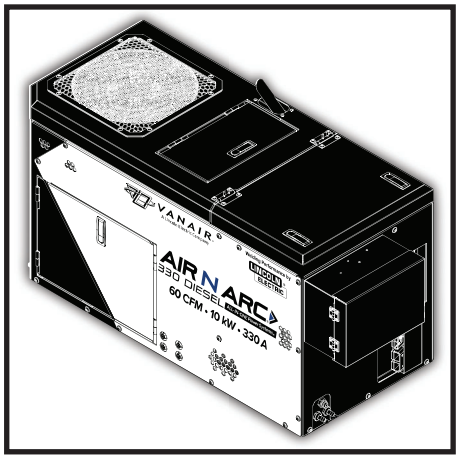

VANAIR®
A Lincoln Electric Company

Vanair®, a Lincoln Electric Company
10896 West 300 North
Michigan City, IN 46360
Toll Free: (800) 526-8817
Telephone: (219) 879-5100
Service (toll free): (844) VAN-SERV
(844) 826-7378
vanair.com

KEEP THE MANUAL WITH THE VEHICLE OR EQUIPMENT

⚠ IMPORTANT

Read this manual before installing, operating or servicing this equipment.

Failure to comply with the operation and maintenance instructions in this manual can result in personal injury, and can void the equipment warranty.

NOTE

This publication contains the latest information available at the time of preparation. Every effort has been made to ensure accuracy.

Vanair®, a Lincoln Electric Company, reserves the right to make design change modifications or improvements without prior notification.

NOTE

Making unauthorized modifications to the system components WILL VOID THE WARRANTY!

Always inform Vanair® , a Lincoln Electric Company, before beginning any changes to the Air N Arc® 330 Diesel ALL-IN-ONE Power System®.

P/N: 090187-UG_r1

Effective Date:
MARCH 31, 2026

DEV

©2026 Vanair®, a Lincoln Electric Company
All rights reserved

AIR N ARC®
ALL-IN-ONE POWER-SYSTEMS®

RELIANT™ SERIES

POWERFLEX™ SERIES

PRO SERIES

CONTRACTOR SERIES

VIPER™ SERIES

UTILITY MOUNTS

ALL WARRANTY OR RETURNS MUST BE PRE-AUTHORIZED PRIOR TO PERFORMING ANY WARRANTY WORK.

(844) VAN - SERV

SERVICE@VANAIR.COM

PARTS@VANAIR.COM

10896 W. 300 N.

MICHIGAN CITY, IN 46360

(800) 526-8817

VANAIR.COM

EFFECTIVE: SEPTEMBER 9, 2022

VANAIR® VANTAGE WARRANTY

This limited warranty supersedes all previous Vanair® warranties and is exclusive with no other guarantees or warranties expressed or implied.

LIMITED WARRANTY—Subject to the expressed terms and conditions set forth below, Vanair®, a Lincoln Electric Company ("Vanair"), of Michigan City, Indiana (USA), warrants to the original retail purchaser of new Vanair® equipment that such equipment is free from defects in materials and workmanship when shipped by Vanair®.

For warranty claims received by Vanair® within the applicable warranty periods described below, Vanair® will repair or replace any warranted equipment, parts or components that fail due to defects in material or workmanship or refund the purchase price for the equipment, at Vanair's discretion. Vanair® is not responsible for time or labor to gain access to the machine to perform work. WARRANTY WILL BE VOID IF GENUINE VANAIR® PARTS AND FLUIDS ARE NOT USED.

Vanair® must be notified in writing within thirty (30) days of any such defect or failure. All warranty or returns must be pre-authorized in writing prior to performing warranty work. Call Vanair® for process and forms. Vanair® will provide instructions on the warranty claim procedures to be followed.

Warranty will commence upon receipt of the Warranty Registration Card. If the Warranty Registration Card is not received within six (6) months of shipment from Vanair®, the warranty commencement date shall be thirty (30) days from the date of shipment from Vanair®. Records of warranty adherence are the responsibility of the end user.

1. Lifetime Warranty Parts – 3 Years Labor
   - Rotary Screw Air Compressor Air End
2. 6 Years Parts – 3 Years Labor
   - Vanair® Super Capacitor™ (VSC™)
3. 3 Years Parts – 1 Year Labor
   - Reciprocating Compressor Air End
   - Generators
   - Welders
4. 2 Years Parts – 1 Year Labor
   - Hydraulic Motors
   - Hydraulic Pumps
5. 1 Year Parts – 1 Year Labor
   - All electronics including, but not limited to:

   i) I/O Boards

   ii) Modules

   iii) (Panel Boxes

   iv) Instrumentation

   - Solenoids
   - Clutches
   - Running Gear/Trailers
   - Compressor/Hydraulic Coolers, including Fan and Radiator Core

This Limited Warranty shall not apply to:

1. Consumable components, such as shaft seals, valves, belts, filters, capacitors, contactors, relays, brushes or parts that fail due to normal wear and use.
2. Items furnished by Vanair®, but manufactured by others, such as engines and trade accessories (these items are covered by the manufacturer's warranty, if any).
3. Equipment that has been modified by any party other than Vanair® or equipment which has not been used and maintained in accordance with Vanair's specifications.
4. Equipment which has been improperly installed and/or improperly operated, based upon Vanair's specifications for the equipment or industry standards.
5. Equipment installed by non-authorized or third party personnel. Vanair® products are intended for purchase and use by commercial/industrial users and persons trained and experienced in the use and maintenance of industrial equipment.

In the event of a warranty claim covered by this Limited Warranty, the exclusive remedies shall be, at Vanair's sole discretion: (i) repair; or (ii) replacement; (iii) where authorized in writing by Vanair® in appropriate cases, the reasonable cost of repair or replacement at an authorized Vanair® service facility ; or (iv) payment of (or credit for) the purchase price (less reasonable depreciation based upon actual use) upon return of the equipment at the warranty claimant's risk and expense. Vanair® will pay standard ground freight for any warranty item shipped to and from Vanair® or (Vanair® designated facility) within the first year of the applicable warranty period. Any additional expedited freight cost is the responsibility of the purchaser.

TO THE GREAT EXTENT PERMITTED BY APPLICABLE LAW, THE REMEDIES PROVIDED HEREIN ARE THE SOLE AND EXCLUSIVE REMEDIES APPLICABLE TO THE VANAIR® EQUIPMENT. IN NO EVENT SHALL VANAIR® BECOME LIABLE FOR DIRECT, INDIRECT, SPECIAL, PUNITIVE, INCIDENTAL OR CONSEQUENTIAL DAMAGES (INCLUDING LOSS OF PROFIT OR LOST BUSINESS OPPORTUNITY), WHETHER BASED ON CONTRACT, TORT OR ANY OTHER LEGAL THEORY. IN NO EVENT SHALL VANAIR® BECOME OBLIGATED TO PAY MORE ON ANY WARRANTY CLAIM THAN THE PURCHASE PRICE ACTUALLY PAID BY THE ORIGINAL RETAIL PURCHASER.

THIS LIMITED WARRANTY IS MADE IN LIEU OF ALL OTHER WARRANTIES, EXPRESS OR IMPLIED, INCLUDING THE WARRANTIES OF MERCHANTABILITY AND/OR FITNESS FOR A PARTICULAR PURPOSE, OR ANY OTHER WARRANTY OR GUARANTY ARISING BY OPERATION OF LAW. ANY WARRANTY NOT EXPRESSLY PROVIDED HEREIN, IMPLIED WARRANTY, GUARANTY AND ANY REPRESENTATION REGARDING THE PERFORMANCE OF THE EQUIPMENT, AND ANY REMEDY FOR BREACH OF CONTRACT, IN TORT, OR ANY OTHER LEGAL THEORY WHICH, BUT FOR THIS PROVISION, MIGHT ARISE BY IMPLICATION, OPERATION OF LAW, CUSTOM OF TRADE, OR COURSE OF DEALING ARE EXCLUDED AND DISCLAIMED BY VANAIR®.

Some states in the United States of America do not allow limitations of how long an implied warranty lasts, or the exclusion of incidental, indirect, special or consequential damages, and as such, the above limitations and exclusions may not apply to you. This warranty provides specific legal rights. Other rights may be available to you, but may vary from state to state.

In Canada, legislation in some provinces provides for certain additional warranties or remedies other than as stated herein, and to the extent that they may not be saved, the limitations and exclusions set out forth above may not apply. This Limited Warranty provides specific legal rights, and other rights may be available, but may vary from province to province.

VANAIR®
A Lincoln Electric Company

TABLE OF CONTENTS

WARRANTY ..... **(BEHIND COVER)**
TABLE OF CONTENTS ..... **TOC - I**
WARRANTY CLAIMS PROCEDURE ..... **WARRANTY - I**
CLAIMS PROCESS FOR WARRANTED PARTS ..... WARRANTY - I
PROCEDURE ..... WARRANTY - I
Figure W-1: Machine Serial Plates / Serial Numbers Locations ..... WARRANTY- II

SECTION 1: ⚠ SAFETY ..... **1 - 1**
1.1 ⚠GENERAL INFORMATION ..... **1 - 1**
1.2 ⚠DANGERS, WARNINGS, CAUTIONS, AND NOTES ..... **1 - 1**
1.3 ⚠INTERNATIONAL SAFETY SYMBOL ..... **1 - 2**
1.4 ⚠ARC WELDING HAZARD ..... **1 - 2**
1.4.1 ⚠ELECTRICAL SHOCK CAN KILL ..... *1 - 2*
1.4.2 ⚠FUMES AND GASES CAN BE HAZARDOUS ..... *1 - 3*
1.4.3 ⚠BUILD UP OF GAS CAN INJURE OR KILL ..... *1 - 3*
1.4.4 ⚠ENCLOSED SPACES CAN CAUSE A BUILD-UP OF NOXIOUS FUMES AND OVERHEATING ..... *1 - 3*
1.4.5 ⚠ARC RAYS CAN BURN EYES AND SKIN ..... *1 - 3*
1.4.6 ⚠WELDING CAN CAUSE FIRE AND EXPLOSION ..... *1 - 4*
1.4.7 ⚠FLYING METAL CAN INJURE EYES ..... *1 - 4*
1.4.8 ⚠HOT PARTS CAN CAUSE SEVERE BURNS ..... *1 - 4*
1.4.9 ⚠NOISE CAN DAMAGE HEARING ..... *1 - 4*
1.4.10 ⚠MAGNETIC FIELDS CAN AFFECT PACEMAKERS ..... *1 - 4*
1.4.11 ⚠CYLINDERS CAN EXPLODE IF DAMAGED ..... *1 - 4*
1.5 ⚠ENGINE HAZARDS ..... **1 - 5**
1.5.1 ⚠BATTERY EXPLOSION CAN BLIND ..... *1 - 5*

Continued on next page...

SECTION 1: ⚠ SAFETY (CONTINUED)

1.5.2 ⚠FUEL CAN CAUSE FIRE OR EXPLOSION ..... 1 - 5

1.5.3 ⚠MOVING PARTS CAN CAUSE INJURY ..... 1 - 5

1.5.4 ⚠HOT PARTS CAN CAUSE SEVERE BURNS ..... 1 - 5

1.5.5 ⚠ENGINE EXHAUST GASES CAN KILL ..... 1 - 5

1.5.6 ⚠ENCLOSED SPACES CAN CAUSE A BUILD-UP OF NOXIOUS FUMES AND OVERHEATING ..... 1 - 6

1.5.7 ⚠BATTERY ACID CAN BURN SKIN AND EYES ..... 1 - 6

1.5.8 ⚠ENGINE HEAT CAN CAUSE FIRE ..... 1 - 6

1.5.9 ⚠EXHAUST SPARKS CAN CAUSE FIRE ..... 1 - 6

1.6 ⚠COMPRESSED AIR HAZARDS ..... 1 - 6

1.6.1 ⚠BREATHING COMPRESSED AIR CAN CAUSE SERIOUS INJURY OR DEATH ..... 1 - 6

1.6.2 ⚠ENCLOSED SPACES CAN CAUSE A BUILD-UP OF NOXIOUS FUMES AND OVERHEATING ..... 1 - 6

1.6.3 ⚠COMPRESSED AIR CAN CAUSE INJURY ..... 1 - 6

1.6.4 ⚠TRAPPED AIR PRESSURE AND WHIPPING HOSES CAN CAUSE INJURY ..... 1 - 6

1.6.5 ⚠HOT METAL FROM AIR ARC CUTTING AND GOUGING CAN CAUSE FIRE OR EXPLOSION ..... 1 - 6

1.6.6 ⚠HOT PARTS CAN CAUSE SEVERE BURNS ..... 1 - 6

1.6.7 ⚠READ INSTRUCTIONS ..... 1 - 6

1.7 ⚠ADDITIONAL SYMBOLS FOR INSTALLATION, OPERATION AND MAINTENANCE ..... 1 - 6

1.7.1 ⚠FALLING UNIT CAN CAUSE INJURY ..... 1 - 6

1.7.2 ⚠OVERHEATING CAN DAMAGE MOTORS ..... 1 - 7

1.7.3 ⚠FLYING SPARKS CAN CAUSE INJURY ..... 1 - 7

1.7.4 ⚠OVERUSE CAN CAUSE OVERHEATING ..... 1 - 7

Continued on next page...

SECTION 1: ⚠ SAFETY (CONTINUED)

1.7.5 ⚠ENCLOSED SPACES CAN CAUSE A BUILD-UP OF NOXIOUS FUMES AND OVERHEATING ..... 1 - 7

1.7.6 ⚠TILTING OF TRAILER CAN CAUSE INJURY ..... 1 - 7

1.7.7 ⚠READ INSTRUCTIONS ..... 1 - 7

1.7.8 ⚠H. F. RADIATION CAN CAUSE INTERFERENCE ..... 1 - 7

1.7.9 ⚠ARC WELDING CAN CAUSE INTERFERENCE ..... 1 - 7

1.8 ⚠PRINCIPAL SAFETY STANDARDS ..... 1 - 8

1.9 ⚠SAFETY DECALS ..... 1 - 8

1.10 ⚠CALIFORNIA PROPOSITION 65 WARNINGS ..... 1 - 8

1.11 ⚠EMF INFORMATION ..... 1 - 9

1.12 ⚠UPFITTERS' OBLIGATIONS ..... 1 - 9

1.13 ⚠DISPOSING OF MACHINE FLUIDS ..... 1 - 10

SECTION 2: OPERATION ..... 2 - 1

2.1 GENERAL INFORMATION ..... 2 - 1

2.2 MACHINE START-UP AND SHUTDOWN PROCEDURE ..... 2 - 1

2.2.1 START-UP FROM MACHINE ..... 2 - 2

Figure 2-2: Instrument Panel Functions ..... 2 - 3

2.2.2 MACHINE SHUTDOWN ..... 2 - 4

2.2.3 ⚠EMERGENCY SHUTDOWN PROCEDURE ..... 2 - 4

AFTER AN EMERGENCY SHUTDOWN ..... 2 - 4

2.3 ENGINE THROTTLE CONTROL FUNCTIONS ..... 2 - 4

2.4 OPERATING THE WELDER ..... 2 - 4

2.4.1 WELDER OPERATING PROCEDURE ..... 2 - 5

2.4.1.1 CC (CONSTANT CURRENT) MODE ..... 2 - 5

TABLE 2A: ELECTRODE SPECIFICATIONS ..... 2 - 5

2.4.1.2 CV (CONSTANT VOLTAGE) MODE - USING A VOLTAGE SENSING SUITCASE FEEDER OR SPOOL GUN ..... 2 - 5

TABLE 2B: WELDING ROD TYPE, POLARITY AND FLUX CODES ..... 2 - 6

Continued on next page...

SECTION 2: OPERATION (CONTINUED)

2.5 OPERATING THE GENERATOR ..... 2 - 6

2.6 OPERATING THE COMPRESSOR ..... 2 - 7

2.6.1 HIGH MOISTURE CONDITION: EMULSIFICATION OF OIL IN ROTARY SCREW COMPRESSOR SYSTEMS ..... 2 - 7

TABLE 2C: HIGH MOISTURE CONDITION OPERATION ..... 2 - 8

2.6.1.1 PREVENTION OF EMULSIFICATION ..... 2 - 8

2.6.1.2 INFREQUENT USE ..... 2 - 9

2.7 OPERATING THE BATTERY BOOSTER/CHARGER ..... 2 - 9

2.7.1 CONNECTION - DISCONNECTION SEQUENCE AND OPERATION ..... 2 - 9

2.8 EXTREME CONDITIONS ..... 2 - 10

Module Screens / Visual Control Guide *(1 OF 6 PAGES)* ..... 2 - 11

SECTION 3: MAINTENANCE ..... 3 - 1

3.1 GENERAL INFORMATION ..... 3 - 1

Figure 3-1: Compressor Oil Level Check ..... 3 - 1

3.2 ROUTINE MAINTENANCE SCHEDULE ..... 3 - 2

3.3 REPLACEMENT PARTS ..... 3 - 2

TABLE 3A: MACHINE MAINTENANCE SCHEDULE INTERVALS ..... 3 - 3

TABLE 3B: ROUTINE MAINTENANCE REPLACEMENT KITS ..... 3 - 3

3.4 PARTS REPLACEMENT AND ADJUSTMENT PROCEDURES ..... 3 - 16

3.4.1 RE-TENSIONING AND REPLACING THE SERPENTINE DRIVE BELT ..... 3 - 16

3.4.1.1 BELT TENSION CHECK ..... 3 - 16

3.4.1.2 ADJUSTING THE BELT TENSION ..... 3 - 16

TABLE 3C: DRIVE BELT TORQUES ..... 3 - 17

3.4.1.3 REPLACING THE DRIVE BELT - 40 CFM MODELS ..... 3 - 17

3.4.1.4 REPLACING THE DRIVE BELT - 60 CFM MODELS ..... 3 - 18

3.4.2 REPLACING THE ENGINE FAN/ALTERNATOR DRIVER BELT ..... 3 - 19

3.4.2.1 BELT TENSION CHECK ..... 3 - 20

3.4.3 SERVICING THE SYSTEM FUSES AND CIRCUIT BREAKERS ..... 3 - 20

Continued on next page...

SECTION 3: MAINTENANCE (CONTINUED)

3.4.4 VENTING THE FUEL LINE ..... 3 - 21

3.4.5 ENGINE COOLING SYSTEM MAINTENANCE ..... 3 -22

DRAINING ..... 3 - 21

FLUSHING ..... 3 - 21

COOLANT REPLACEMENT ..... 3 - 23

3.5 STORAGE AND INTERMITTENT USE ..... 3 - 23

3.5.1 INTERMITTENT USE ..... 3 - 22

3.5.2 LONG TERM STORAGE ..... 3 - 23

SECTION 4: TROUBLESHOOTING ..... 4 - 1

4.1 GENERAL INFORMATION ..... 4 - 1

Figure 4-1: Machine Serial Plate / Serial Number Location ..... 4 - 1

4.2 TROUBLESHOOTING GUIDE ..... 4 - 2

4.3 EXTREME CONDITION OPERATION ..... 4 - 6

4.3.1 HIGH MOISTURE CONDITION OF COMPRESSOR OIL ..... 4 - 7

4.3.2 COLD WEATHER OPERATION ..... 4 - 7

TABLE 4.3A: COLD WEATHER OPERATION ..... 4 - 7

4.3.3 HIGH TEMPERATURE OPERATION ..... 4 - 7

TABLE 4.3B: HIGH TEMPERATURE OPERATION ..... 4 - 8

4.3.4 HIGH DUST CONTENT OPERATION ..... 4 - 8

TABLE 4.3C: HIGH DUST CONTENT OPERATION ..... 4 - 8

4.3.5 HIGH ALTITUDE OPERATION ..... 4 - 8

SECTION 5: ORDERING PARTS / COMMON PARTS ..... 5 - 1

5.1 PARTS ORDERING INFORMATION ..... 5 - 1

Figure 5-1: Machine Serial Plate / Serial Number Location ..... 5 - 1

TABLE 5A: RECOMMENDED SPARE PARTS LIST ..... 5 - 2

TABLE 5B: AVAILABLE OPTIONS LIST ..... 5 - 3

Continued on next page...

SECTION 5: ORDERING PARTS / COMMON PARTS (CONT.)

5.2 DECAL GROUP - 1 OF 2 ..... 5 - 4
5.2 DECAL GROUP - 2 OF 2 ..... 5 - 6
5.3 WIRING DIAGRAM - AIR N ARC® 330 DIESEL, 1 OF 4 ..... 5 - 8
5.3 WIRING DIAGRAM - AIR N ARC® 330 DIESEL, 2 OF 4 ..... 5 - 9
5.3 WIRING DIAGRAM - AIR N ARC® 330 DIESEL, 3 OF 4 ..... 5 - 10
5.3 WIRING DIAGRAM - AIR N ARC® 330 DIESEL, 4 OF 4 ..... 5 - 11
5.4 FLOW SCHEMATIC - AIR N ARC® 330 DIESEL, COMPRESSOR SYSTEM ..... 5 - 12
5.5 FLOW SCHEMATIC - AIR N ARC® 330 DIESEL, ENGINE / FUEL SYSTEM ..... 5 - 13
TABLE 5C: MAINTENANCE TRACKING LOG ..... 5 - 14

WARRANTY CLAIMS PROCEDURE

CLAIMS PROCESS FOR WARRANTED VANAIR® PARTS

This process must be used by owners of Vanair® equipment in situations where a warranted item needs repair or replacement under the terms of the purchase warranty. **DO NOT** return items to Vanair® without prior authorization from the Vanair® Warranty Administrator.

PROCEDURE:

When a customer needs assistance in troubleshooting a system and/or returning parts, follow the steps below.

1. **Locate the machine's serial number:**

The machine package serial number plate is located inside the machine compartment on the floor near to the generator mounting location (see ***Figure W-1***).

The engine and the compressor also have individual serial numbers respectively (see ***Figure W-1***). For engine warranty issues, consult the Engine Operation Manual for the engine's limited warranty details. For particular compressor unit issues, the compressor serial number may be needed. In any case, engine and/or compressor issues can be confirmed using the machine serial number as found in ***Figure W-1***.

2. **Have a list of the symptoms/condition/ malfunctions along with any applicable temperature and pressure readings, and also the number of operational hours available:**

Note that the above information will also need to be included on the Return Material Authorization Form (per **Step #6**); this form is necessary for warranty processing if the warranty claim is deemed valid by the service case review.

3. **Contact the Vanair® Service Department by phone (1-844-VANSERV or 1-219-879-5100) to speak with a Service Technician.**
4. **Vanair® Service will troubleshoot the problem based on the information provided by the customer, and attempt to return the unit to service as quickly as possible.**
5. **If the unit cannot be returned to service, and Vanair® determines this matter is a warranty issue, the Service Technician will assign an RMA (Return Material Authorization) number that will provide for the return of the item to Vanair® for analysis and a final determination as to the item's warranty status.**

NOTE
The RMA number must be placed on the outside of the package being returned.

6. **Warranty Claims are solicited via a Return Material Authorization (RMA) Form. This form can be obtained via download from the web site, or requested directly from the Vanair® Service Department:**

Once a current form has been obtained, follow the instructions given on the form to fill in the information needed. This form is used for the purpose of soliciting a warranty case. All of the field information except for the bottom section block fields, which includes Disposition of Goods, Notifications and Additional Notes, will be required.

Customers have 30 days after the RMA number is issued to return the item. If the part is not returned within this period, the RMA is void and any claims will be denied.

NOTE
All labor claims or invoices must be approved by the Vanair® Warranty Administrator prior to starting repair work along with the cost of the repair. All paper work associated with the returned item and warranty repair cost must reference the RMA number issued against the part, and be forwarded to Vanair® within 30 days of the completion of work.

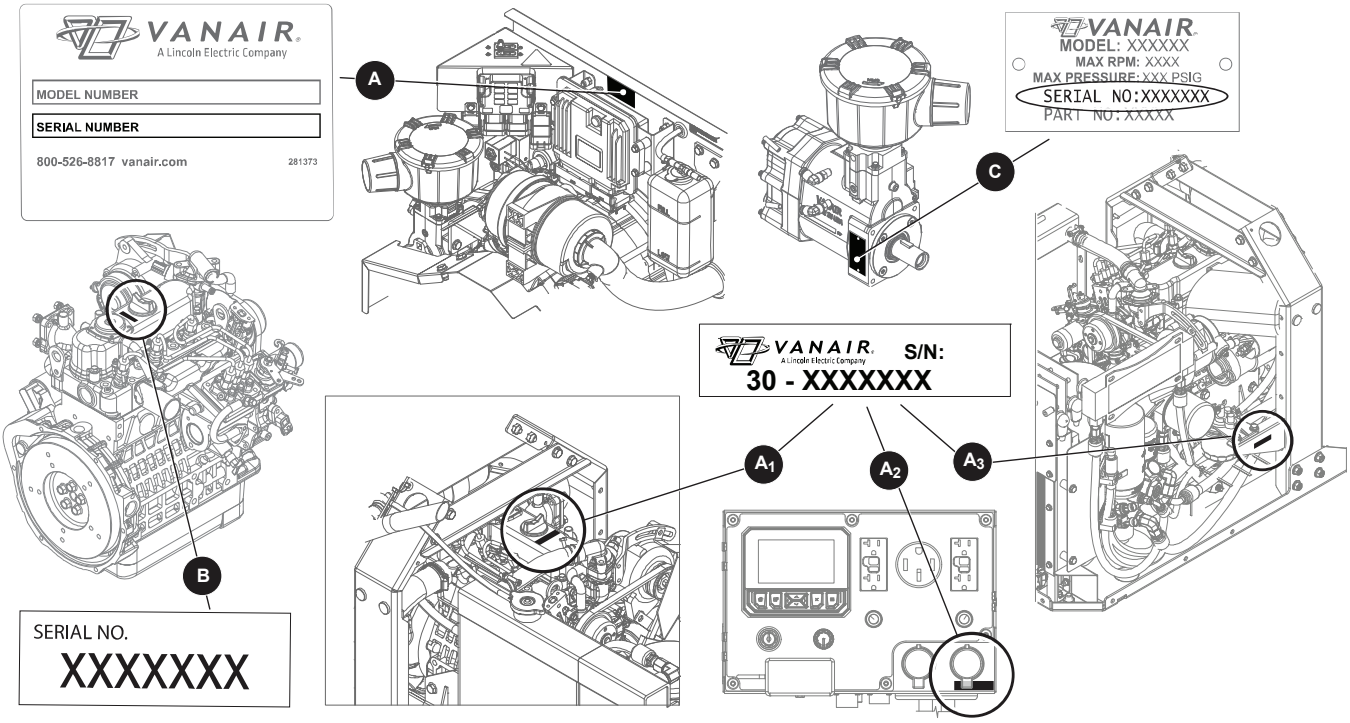

KEY	DESCRIPTION	KEY	DESCRIPTION
A	MACHINE SERIAL PLATE / SERIAL NUMBER LOCATION [I]	A_3	MACHINE SERIAL TAG #3 LOCATION [I]
A_1	MACHINE SERIAL TAG #1 LOCATION [I]	B	ENGINE SERIAL TAG / SERIAL NUMBER LOCATION
A_2	MACHINE SERIAL TAG #2 LOCATION [I]	C	COMPRESSOR SERIAL PLATE / SERIAL NUMBER LOCATION

[I] Serial tags (and serial plate) contain the overall machine serial number.

Figure W-1: Machine Serial Plates / Serial Numbers Locations

Before sending a warranty part to a customer, Vanair® will need a P.O. or credit card number to cover the cost of the part and shipping. After the part is analyzed and deemed to be covered under warranty, Vanair® will issue credit to the customer. All parts eligible for warranty must have the RMA number on the invoice at the time of purchase.

No items can be returned “freight collect”. Freight costs will be addressed at the time the claim is closed. The customer pays any additional costs for warranty parts delivered through expedited services (i.e., Next Day, Second Day).

IMPORTANT

Vanair® will never accept any invoices for parts returned. Any parts returned via invoice will be returned freight collect. No parts are to be returned freight collect!

Vanair®, a Lincoln Electric Company, strives to continuously improve its customer service. Please forward any questions, comments, or suggestions to:

Service Toll Free: 1-844-VAN-SERV
1-844-826-7378
Service Direct: 1-219-879-5100, ext. 400
E-mail: service@vanair.com

SECTION 1: ⚠ SAFETY

1.1 ⚠ GENERAL INFORMATION

The products provided by Vanair®, a Lincoln Electric Company, are designed and manufactured for safe operation and maintenance. But it is ultimately the responsibility of the users and maintainers for safe use of this equipment. Part of this responsibility is to read and be familiar with the contents of this manual before operation or performing maintenance actions.

⚠ IMPORTANT

It is mandatory that all operators read this manual before operating or servicing the Air N Arc® 330 Diesel ALL-IN-ONE Power System®. Failure to do so could result in death, bodily injury or damage to equipment.

⚠ DANGER

DO NOT OPERATE IN AN ENCLOSED SPACE.

Running any combustion engine in an enclosed space will result in Carbon Monoxide (CO) poisoning and may cause overheating, which may result in fire and/or explosion.

CO build-up can cause death!

Overheating can ignite surrounding materials resulting in fire and/or explosion which may cause injury, death and equipment damage.

IMPORTANT

An enclosed space refers to any area partially or fully enclosed by walls, a roof, or other boundaries.

Continued...

IMPORTANT (continued)

These spaces can limit natural ventilation, restrict airflow, trap hazardous gases, and increase the risk of heat build-up, fire, or explosion.

It is the responsibility of the installation party to determine and mount Vanair® engine-driven equipment in a way that ensures proper airflow and ventilation for safe operation. Failure to provide proper ventilation and clearances may result in hazardous conditions.

Vanair® assumes no responsibility or liability for installations it did not perform.

1.2 ⚠ DANGERS, WARNINGS, CAUTIONS, AND NOTES

⚠ DANGER

Identifies actions or conditions which, if not avoided, will cause death or severe bodily injury.

⚠ WARNING

Identifies actions or conditions which, if not avoided, could cause death or severe bodily injury.

⚠ CAUTION

Identifies actions or conditions which, if not avoided, could cause minor or moderate bodily injury.

IMPORTANT

Emphasized information pertaining to the machine that may affect function, operation, maintenance and/or service.

⚠ IMPORTANT

Emphasized information pertaining to the machine that may affect function, operation, maintenance and/or service, and may involve the possibility of bodily harm.

IMPORTANT

Emphasized additional information (or existing information) which should be brought to the attention of operators/maintainers affecting safety, operation, maintenance, or warranty requirements.

NOTE

Additional information (or existing information) which should be brought to the attention of operators/maintainers affecting safety, operation, maintenance, or warranty requirements.

1.3 ⚠ INTERNATIONAL SAFETY SYMBOL - ⚠ ⚠

The symbols shown and defined in **Section 1: Safety** are used throughout this manual to call attention to and identify possible hazards.

The international warning symbol shown above is used on all decals, labels and signs that concern information pertaining to bodily harm. When you see the international warning symbol, pay extremely careful attention, and follow the given instructions or indications to avoid any possible hazard.

1.4 ⚠ ARC WELDING HAZARDS

1.4.1 ⚠ ELECTRICAL SHOCK CAN KILL

Touching live electrical parts can cause fatal shocks or severe burns. The electrode and work circuit is electrically live whenever the output is on. The input power circuit and machine internal circuits are also live when power is on. In semiautomatic or automatic wire welding, the wire, wire reel, drive roll housing, and all metal parts touching the welding wire are electrically live. Incorrectly installed or improperly grounded equipment is a hazard.

DO NOT touch live electrical parts.

Wear dry, hole-free insulating gloves and body protection.

Insulate yourself from work and ground using dry insulating mats or covers big enough to prevent any physical contact with the work or ground.

DO NOT use AC output in damp areas, if movement is confined, or if there is a danger of falling.

Additional safety precautions are required when working in electrically hazardous conditions such as in damp locations or while wearing wet clothing; on metal structures such as floors, gratings, or scaffolds; when in cramped positions such as sitting, kneeling, or lying; or when there is a high risk of unavoidable or accidental contact with the work piece or ground.

DO NOT work alone!

Disconnect input power or stop engine before installing or servicing this equipment. Lockout/tag out input power according to OSHA29 CFR1910.147 (see Section 1.9, Principal Safety Standards).

Properly install and ground this equipment according to its Owner's Manual and national, state, and local codes.

Always verify the supply ground: check and be sure that input power cord ground wire is properly connected to ground terminal in disconnect box or that cord plug is connected to a properly grounded receptacle outlet.

When making input connections, attach proper grounding conductor first and double-check connections.

Frequently inspect input power cord for damage or bare wiring; replace cord immediately if damaged—bare wiring can kill.

Turn off all equipment when not in use.

DO NOT use worn, damaged, undersized, or poorly spliced cables.

DO NOT drape cables over your body.

If earth grounding of the work piece is required, ground it directly with a separate cable.

DO NOT touch electrode if you are in contact with the work, ground, or another electrode from a different machine.

Use only well-maintained equipment. Repair or replace damaged parts at once. Maintain unit according to manual.

DO NOT touch electrode holders connected to two welding machines at the same time since double open-circuit voltage will be present.

Wear a safety harness if working above floor level.

Keep all panels and covers securely in place.

Clamp work cable with good metal-to-metal contact to work piece or work table as near the weld as practical.

Insulate work clamp when not connected to workpiece to prevent contact with any metal object.

DO NOT connect more than one electrode or work cable to any single weld output terminal.

1.4.2 ⚠ FUMES AND GASES CAN BE HAZARDOUS

Welding produces fumes and gases. Breathing these fumes and gases can be hazardous to your health.

Keep your head out of the fumes. **DO NOT** breathe the fumes.

If inside, ventilate the area and/or use local forced ventilation at the arc to remove welding fumes and gases.

If ventilation is poor, wear an approved air-supplied respirator.

Read and understand the Safety Data Sheets (SDS's) and the manufacturer's instructions for metals, consumables, coatings, cleaners, and degreasers.

Work in a confined space only if it is well ventilated, or while wearing an air-supplied respirator. Always have a trained watch person nearby.

Welding fumes and gases can displace air and lower the oxygen level causing injury or death. Be sure the breathing air is safe.

DO NOT weld in locations near degreasing, cleaning, or spraying operations.

The heat and rays of the arc can react with vapors to form highly toxic and irritating gases.

DO NOT weld on coated metals, such as galvanized, lead, or cadmium-plated steel, unless the coating is removed from the weld area, the area is well-ventilated, and while wearing an air-supplied respirator. The coatings and any metals containing these elements can give off toxic fumes if welded.

1.4.3 ⚠ BUILD UP OF GAS CAN INJURE OR KILL

Shut off shielding gas supply when not in use.

Always ventilate confined spaces or use approved air-supplied respirator.

1.4.4 ⚠ ENCLOSED SPACES CAN CAUSE A BUILD-UP OF NOXIOUS FUMES AND OVERHEATING

DO NOT use in enclosed spaces where deadly exhaust gases can build up and machine can overheat, causing fire.

1.4.5 ⚠ ARC RAYS CAN BURN EYES AND SKIN

Arc rays from the welding process produce intense visible and invisible (ultraviolet and infrared) rays that can burn eyes and skin. Sparks fly off from the weld.

Wear an approved welding helmet fitted with a proper shade of filter lenses to protect your face and eyes from arc rays and sparks when welding or watching.

(See ANSI Z49.1 and Z87.1 listed in Safety Standards). Wear approved safety glasses with side shields under your helmet.

Use protective screens or barriers to protect others from flash, glare, and sparks; warn others not to watch the arc.

Wear protective clothing made from durable, flame-resistant material (leather, heavy cotton, or wool) and foot protection.

1.4.6 ⚠ WELDING CAN CAUSE FIRE AND EXPLOSION

Welding on closed containers, such as tanks, drums, or pipes, can cause them to blow up. Sparks can fly off from the welding arc. The flying sparks, hot workpiece, and hot equipment can cause fires and burns. Accidental contact of electrode to metal objects can cause sparks, explosion, overheating, or fire. Check and be sure the area is safe before doing any welding.

Remove all flammables within 35 ft (10.7 m) of the welding arc. If this is not possible, tightly cover them with approved covers.

DO NOT weld where flying sparks can strike flammable material.

Protect yourself and others from flying sparks and hot metal.

Be alert that welding sparks and hot materials from welding can easily go through small cracks and openings to adjacent areas.

Watch for fire, and keep a fire extinguisher nearby.

Be aware that welding on a ceiling, floor, bulkhead, or partition can cause fire on the hidden side.

DO NOT weld on closed containers such as tanks, drums, or pipes, unless they are properly prepared according to AWSF4.1 (See **Section 1.9, Principal Safety Standards**).

Connect ground cable as close to the welding area as practical to prevent welding current from traveling long, possibly unknown paths and causing electric shock, sparks, and fire hazards.

DO NOT use welder to thaw frozen pipes.

Remove stick electrode from holder or cut off welding wire at contact tip when not in use.

Wear oil-free protective garments such as leather gloves, heavy shirt, cuffless trousers, boots, and a cap.

Remove any combustibles, such as a butane lighter or matches, from your person before doing any welding.

Follow requirements in OSHA1910.252 (a) (2) (iv) and NFPA 51B for hot work and have a fire watcher and extinguisher nearby.

1.4.7 ⚠ FLYING METAL CAN INJURE EYES

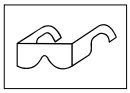

Sparks and flying metal can be caused by welding, chipping, wire brushing, and grinding. As welds cool, they can throw off slag.

Wear approved safety glasses with side shields even under your welding helmet.

1.4.8 ⚠ HOT PARTS CAN CAUSE SEVERE BURNS

DO NOT touch hot parts bare handed. Allow cooling period before working on equipment.

1.4.9 ⚠ NOISE CAN DAMAGE HEARING

To handle hot parts, use proper tools and/or wear heavy, insulated welding gloves and clothing to prevent burns.

Noise from some processes or equipment can damage hearing.

Wear approved ear protection if noise level is high.

1.4.10 ⚠ MAGNETIC FIELDS CAN AFFECT PACEMAKERS

Pacemaker wearers keep away.

Wearers should consult their doctor before going near arc welding, gouging, or spot welding operations.

Shielding gas cylinders contain gas under high pressure. If damaged, a cylinder can explode. Since gas cylinders are normally part of the welding process, be sure to treat them carefully.

1.4.11 ⚠ CYLINDERS CAN EXPLODE IF DAMAGED

Protect compressed gas cylinders from excessive heat, mechanical shocks, physical damage, slag, open flames, sparks, and arcs.

Install cylinders in an upright position by securing to a stationary support or cylinder rack to prevent falling or tipping.

Keep cylinders away from any welding or other electrical circuits.

Never drape a welding torch over a gas cylinder.

Never allow a welding electrode to touch any cylinder.

Never weld on a pressurized cylinder—explosion will result.

Use only correct shielding gas cylinders, regulators, hoses, and fittings designed for the specific application; maintain them and associated parts in good condition.

Turn face away from valve outlet when opening cylinder valve.

Keep protective cap in place over valve except when cylinder is in use or connected for use.

Use the right equipment, correct procedures, and sufficient number of persons to lift and move cylinders.

Read and follow instructions on compressed gas cylinders, associated equipment, and Compressed Gas Association (CGA) publication P-1 listed in Safety Standards.

1.5 ⚠ ENGINE HAZARDS

1.5.1 ⚠ BATTERY EXPLOSION CAN BLIND

Always wear a face shield, rubber gloves, and protective clothing when working on a battery.

Stop engine before disconnecting or connecting battery cables or servicing battery.

DO NOT allow tools to cause sparks when working on a battery.

DO NOT use weld mode to charge batteries or jump start vehicles.

Observe correct polarity (+ and −) on batteries.

Disconnect negative (−) cable first and connect it last.

1.5.2 ⚠ FUEL CAN CAUSE FIRE OR EXPLOSION

Stop engine and let it cool off before checking or adding fuel.

Always keep nozzle in contact with tank when fueling.

DO NOT add fuel while smoking or if unit is near any sparks or open flames.

DO NOT overfill tank—allow room for fuel to expand.

DO NOT spill fuel. If fuel is spilled, clean up before starting engine.

Dispose of rags in a fireproof container.

1.5.3 ⚠ MOVING PARTS CAN CAUSE INJURY

Keep away from fans, belts, and rotors. Keep all doors, panels, covers, and guards closed and securely in place.

Stop engine before installing or connecting unit.

Have only qualified people remove doors, panels, covers, or guards for maintenance and troubleshooting as necessary.

Disconnect negative (−) battery cable from battery to prevent accidental starting during servicing.

Keep hands, hair, loose clothing, and tools away from moving parts.

Reinstall doors, panels, covers, or guards when servicing is finished and before starting engine.

Before working on generator, remove spark plugs or injectors to keep engine from kicking back or starting.

Block flywheel so that it will not turn while working on generator components.

1.5.4 ⚠ HOT PARTS CAN CAUSE SEVERE BURNS

DO NOT touch hot parts bare handed.

Allow cooling period before working on equipment.

1.5.5 ⚠ ENGINE EXHAUST GASES CAN KILL

If used in a closed area, vent engine exhaust outside and away from any building air intakes.

1.5.6 ⚠ ENCLOSED SPACES CAN CAUSE A BUILD-UP OF NOXIOUS FUMES AND OVERHEATING

DO NOT use in enclosed spaces where deadly exhaust gases can build up and machine can overheat, causing fire.

1.5.7 ⚠ BATTERY ACID CAN BURN SKIN AND EYES

DO NOT tip battery.

Replace damaged battery.

Flush eyes and skin immediately with water.

1.5.8 ⚠ ENGINE HEAT CAN CAUSE FIRE

DO NOT locate unit on, over, or near combustible surfaces or flammables.

Keep exhaust and exhaust pipes way from flammables.

1.5.9 ⚠ EXHAUST SPARKS CAN CAUSE FIRE

Use approved engine exhaust spark arrester in required areas — see applicable codes.

1.6 ⚠ COMPRESSED AIR HAZARDS

1.6.1 ⚠ BREATHING COMPRESSED AIR CAN CAUSE SERIOUS INJURY OR DEATH

DO NOT use compressed air for breathing.

Use only for cutting, gouging, and tools.

1.6.2 ⚠ ENCLOSED SPACES CAN CAUSE A BUILD-UP OF NOXIOUS FUMES AND OVERHEATING

DO NOT use in enclosed spaces where deadly exhaust gases can build up and machine can overheat, causing fire.

1.6.3 ⚠ COMPRESSED AIR CAN CAUSE INJURY

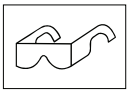

Wear approved safety goggles.

DO NOT direct air stream toward self or others.

1.6.4 ⚠ TRAPPED AIR PRESSURE AND WHIPPING HOSES CAN CAUSE INJURY

Release air pressure from tools and system before servicing, adding or changing attachments, or opening compressor oil drain or oil fill cap.

1.6.5 ⚠ HOT METAL FROM AIR ARC CUTTING AND GOUGING CAN CAUSE FIRE OR EXPLOSION

DO NOT cut or gouge near flammables.

Watch for fire; keep extinguisher nearby.

1.6.6 ⚠ HOT PARTS CAN CAUSE SEVERE BURNS

DO NOT touch hot parts bare handed.

Allow cooling period before working on equipment.

1.6.7 ⚠ READ INSTRUCTIONS

Read Owner's Manual before using or servicing unit.

Stop engine and release air pressure before servicing.

Use only genuine Air N Arc® ALL-IN-ONE Power System® replacement parts.

1.7 ⚠ ADDITIONAL SYMBOLS FOR INSTALLATION, OPERATION AND MAINTENANCE

1.7.1 ⚠ FALLING UNIT CAN CAUSE INJURY

Use lifting bail to lift unit and properly installed accessories only.

Lift and support unit only with proper

equipment and correct procedures.

If using lift forks to move unit, be sure forks are long enough to extend beyond opposite side of unit.

1.7.2 ⚠ OVERHEATING CAN DAMAGE MOTORS

Turn off or unplug equipment before starting or stopping engine.

DO NOT let low voltage and frequency caused by low engine speed damage electric motors.

1.7.3 ⚠ FLYING SPARKS CAN CAUSE INJURY

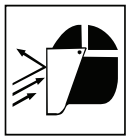

Wear a face shield to protect eyes and face.

Shape tungsten electrode only on grinder with proper guards in a safe location wearing proper face, hand, and body protection.

Sparks can cause fires—keep flammables away.

1.7.4 ⚠ OVERUSE CAN CAUSE OVERHEATING

Allow cooling period; follow rated duty cycle.

Reduce current or reduce duty cycle before starting to weld again.

DO NOT block or filter airflow to unit.

1.7.5 ⚠ ENCLOSED SPACES CAN CAUSE A BUILD-UP OF NOXIOUS FUMES AND OVERHEATING

DO NOT use in enclosed spaces where deadly exhaust gas can build up and machine can overheat, causing fire.

1.7.6 ⚠ TILTING OF TRAILER CAN CAUSE INJURY

Use tongue jack or blocks to support weight.

Properly install unit onto trailer according to instructions supplied with trailer.

1.7.7 ⚠ READ INSTRUCTIONS

Use only genuine Air N Arc® replacement parts.

Perform engine and air compressor (if applicable) maintenance and service according to this manual and the engine/ air compressor (if applicable) manuals.

1.7.8 ⚠ H. F. RADIATION CAN CAUSE INTERFERENCE

High-frequency (H.F.) can interfere with radio navigation, safety services, computers, and communications equipment.

Have only qualified persons familiar with electronic equipment perform this installation.

The user is responsible for having a qualified electrician promptly correct any interference problem resulting from the installation.

If notified by the FCC about interference, stop using the equipment at once.

Have the installation regularly checked and maintained.

Keep high-frequency source doors and panels tightly shut, keep spark gaps at correct setting, and use grounding and shielding to minimize the possibility of interference.

1.7.9 ⚠ ARC WELDING CAN CAUSE INTERFERENCE

Electromagnetic energy can interfere with sensitive electronic equipment such as microprocessors, computers, and computer-driven equipment such as robots.

Ensure all equipment in the welding area is electromagnetically compatible.

To reduce possible interference, keep weld cables as short as possible, close together, and down low, such as on the floor.

Locate welding operation 100 meters from any sensitive electronic equipment.

Ensure this welding machine is installed and

grounded according to this manual.

If interference still occurs, the user must take extra measures such as moving the welding machine, using shielded cables, using line filters, or shielding the work area.

1.8 ⚠ PRINCIPAL SAFETY STANDARDS

Safety in Welding, Cutting, and Allied Processes, ANSI Standard Z49.1, from Global Engineering Documents (phone: 1-877-413-5184, website: www.global.ihs.com).

Recommended Safe Practices for the Preparation for Welding and Cutting of Containers and Piping, American Welding Society Standard AWSF4.1, from Global Engineering Documents (phone: 1-877-413-5184, web site: www.global.ihs.com).

National Electrical Code, NFPA Standard 70, from National Fire Protection Association, P.O. Box 9101, 1 Battery March Park, Quincy, MA 02269-9101 (phone: 617-770-3000, web site: www.nfpa.org and www.sparky.org).

Safe Handling of Compressed Gases in Cylinders, CGA Pamphlet P-1, from Compressed Gas Association, 1735 Jefferson Davis Highway, Suite 1004, Arlington, VA 22202-4102 (phone: 703-412-0900, web site: www.cganet.com).

Code for Safety in Welding and Cutting, CSA StandardW117.2, from Canadian Standards Association, Standards Sales, 178 Rexdale Boulevard, Rexdale, Ontario, Canada M9W 1R3 (phone: 800-463-6727 or in Toronto 416-747-4044, web site: www.csainternational.org).

Practice For Occupational And Educational Eye And Face Protection, ANSI Standard Z87.1, from American National Standards Institute, 11West 42nd Street, New York, NY10036-8002 (phone: 212-642-4900, web site: www.ansi.org).

Standard for Fire Prevention During Welding, Cutting, and Other Hot Work, NFPA Standard 51B, from National Fire Protection

Association, P.O. Box 9101, 1 Battery March Park, Quincy, MA 02269-9101 (phone: 617-770-3000, web site: www.nfpa.org.

OSHA, Occupational Safety and Health Standards for General Industry, Title 29, Code of Federal Regulations (CFR), Part 1910, Subpart Q, and Part 1926, Subpart J, from U.S. Government Printing Office, Superintendent of Documents, P.O. Box 371954, Pittsburgh, PA 15250 (there are 10 Regional Offices; phone for Region 5, Chicago, is 312-353-2220, web site: www.osha.gov).

1.9 ⚠ SAFETY DECALS

Safety decals are placed onto, or located near, system components that can present a hazard to operators or service personnel. All pertinent decals listed in **Section 5.2, Decal Group**, are located near components or access paths. All information given on these decals is subject to respect in terms of safety precaution and awareness of hazardous conditions. Always heed the information noted on the safety decals.

⚠ WARNING

If applicable: For machine packages that contain labels to be affixed after machine arrival, all safety decals MUST be placed on machine, in their appropriate positions respectively, as shown in the Decal Section (Section 7.16) of this manual.

⚠ WARNING

DO NOT REMOVE OR COVER ANY SAFETY LABEL. Replace any safety label that becomes damaged or illegible.

1.10 ⚠ CALIFORNIA PROPOSITION 65 WARNINGS

⚠ WARNING

Discharge from this machine may cause cancer and/or reproductive harm.

Proposition 65 requires businesses to provide warnings to Californians about significant exposures to chemicals that cause cancer, birth defects or other reproductive harm. Exposure to these chemicals may take place when products are acquired or used. Exposure may also occur in homes, workplaces, or other environments in California. By requiring that this information be

provided, Proposition 65 enables Californians to make informed decisions about their exposures to these chemicals.

Proposition 65 also prohibits California businesses from knowingly discharging significant amounts of listed chemicals into sources of drinking water.

Welding or cutting equipment produces fumes or gases which contain chemicals known to the State of California to cause birth defects and, in some cases, cancer. (California Health & Safety Code Section 25249.5 et seq.)

Battery posts, terminals and related accessories contain lead and lead compounds, chemicals known to the State of California to cause cancer and birth defects or other reproductive harm. Wash hands after handling.

Diesel engine exhaust and some of its constituents are known to the State of California to cause cancer, birth defects, and other reproductive harm.

1.11 ⚠ EMF INFORMATION

Considerations About Welding And The Effects Of Low Frequency Electric And Magnetic Fields Welding current, as it flows through welding cables, will cause electromagnetic fields.

There has been and still is some concern about such fields. However, after examining more than 500 studies spanning seventeen years of research, a special blue ribbon committee of the National Research Council concluded that: “The body of evidence, in the committee’s judgment, has not demonstrated that exposure to power-frequency electric and magnetic fields is a human-health hazard.” However, studies are still going forth and evidence continues to be examined. Until the final conclusions of the research are reached, you may wish to minimize your exposure to electromagnetic fields when welding or cutting.

To reduce magnetic fields in the workplace, use the following procedures:

1. Keep cables close together by twisting or taping them.
2. Arrange cables to one side and away from the operator.
3. **DO NOT** coil or drape cables around your body.
4. Keep welding power source and cables as far away from operator as possible.
5. Connect work clamp to workpiece as close to the weld as possible.

ABOUT PACEMAKERS:

Pacemaker wearers consult your doctor before welding or going near welding operations. If cleared by your doctor, then following the above procedures is recommended.

1.12 ⚠ UPFITTERS’ OBLIGATIONS

Any modifications or additions made to a vehicle by an upfitter must adhere to all applicable Federal Motor Vehicle Safety Standards (FMVSS), and applicable state regulations to assure the altered vehicle remains safe and meets the same safety requirements as a standard manufactured vehicle.

If unsure about the compliance requirements for specific modifications, vehicle upfitters should consult with the National Highway Traffic Safety Administration (NHTSA) to understand their obligations. www.NHTSA.gov or 1-888-327-4236.

When mounting Vanair® engine-driven equipment the following guidelines must be followed to ensure safe operation and ventilation:

1. **Provide Adequate Ventilation:**
   - Ensure sufficient airflow openings for intake and exhaust to prevent CO build-up and overheating.
   - Use louvers, vents, or fans to facilitate proper air exchange.
2. **Exhaust Management:**
   - Route engine exhaust outside of the service body and away from any enclosed areas, vehicle occupants, or flammable materials.
   - Use properly rated exhaust piping and ensure there are no leaks.
   - Use properly rated heat shields and heat wrap.
3. **Temperature Control:**
   - Install heat shields or insulation where

necessary to reduce heat transfer to nearby materials.

- Avoid placing flammable items near equipment that generates heat.

4. **CO Detection:**
   - Install carbon monoxide detectors in areas where equipment is mounted to provide early warnings of hazardous gas build-up.
5. **Regular Inspection:**
   - Frequently inspect the mounting area for adequate ventilation, proper exhaust routing, and any signs of heat damage or gas leaks.

It is the responsibility of the installation party to determine and mount Vanair® engine-driven equipment in a manner that ensures adequate airflow and ventilation for safe operation. Failure to provide proper ventilation may result in hazardous conditions.

⚠ DANGER

DO NOT OPERATE IN AN ENCLOSED SPACE.

Running any combustion engine in an enclosed space will result in Carbon Monoxide (CO) poisoning and may cause overheating, which may result in fire and/or explosion.

CO build-up can cause death!

Overheating can ignite surrounding materials resulting in fire and/or explosion which may cause injury, death and equipment damage.

IMPORTANT

An enclosed space refers to any area partially or fully enclosed by walls, a roof, or other boundaries.

These spaces can limit natural ventilation, restrict airflow, trap hazardous gases, and increase the risk of heat build-up, fire, or explosion.

It is the responsibility of the installation party to determine and mount Vanair® engine-driven equipment in a way that ensures proper airflow and ventilation for safe operation. Failure to provide proper ventilation and clearances may result in hazardous conditions.

Vanair® assumes no responsibility or liability for installations it did not perform.

1.13 DISPOSING OF MACHINE FLUIDS

Always dispose of machine fluids under the guidance of all applicable local, regional and/or federal law.

Vanair® encourages recycling when allowed. For additional information, consult the container for information.

In addition to the sections, also consult the Engine Operation Manual when performing maintenance.

SECTION 2: OPERATION

2.1 GENERAL INFORMATION

The Air N Arc® 330 Diesel ALL-IN-ONE Power System® has a comprehensive array of controls and indicators for each function of the power system. Understanding the correct operational functions of the 330 Diesel will allow the operator to recognize various operational conditions, such as when the machine is functioning optimally, when maintenance is needed, or if there are indications of a malfunction. The information in the Operation Section will help the operator to recognize, distinguish and interpret these symptoms.

IMPORTANT

General machine operation engagement, including parameter setting, adjusting, and maintenance tracking are controlled via the system control module. Consult the *Modular Screens / Visual Control Guide* found at the end of this section (page 2 - 10).

⚠ DANGER

DO NOT OPERATE IN AN ENCLOSED SPACE.

Running any combustion engine in an enclosed space will result in Carbon Monoxide (CO) poisoning and may cause overheating, which may result in fire and/or explosion.

CO build-up can cause death!

Overheating can ignite surrounding materials resulting in fire and/or explosion which may cause injury, death and equipment damage.

IMPORTANT

An enclosed space refers to any area partially or fully enclosed by walls, a roof, or other boundaries.

Continued...

IMPORTANT (continued)

These spaces can limit natural ventilation, restrict airflow, trap hazardous gases, and increase the risk of heat build-up, fire, or explosion.

It is the responsibility of the installation party to determine and mount Vanair® engine-driven equipment in a way that ensures proper airflow and ventilation for safe operation. Failure to provide proper ventilation and clearances may result in hazardous conditions.

Vanair® assumes no responsibility or liability for installations it did not perform.

⚠ WARNING

Before starting, performing maintenance, or replacing parts, relieve the entire system pressure by opening the air tank drain/vent valve, which will vent all pressure to the atmosphere.

Refer to *Figure 2-1*. Open the compressor fill cap SLOWLY (contents under pressure) to make sure all pressure has been relieved.

⚠ DANGER

DO NOT weld with the electrode holder connected to the negative (-) port and the work piece connected to the vehicle. Bodily harm and equipment damage may occur.

⚠ CAUTION

Compressors and engines generate heat and create hot surfaces. Use caution when operating and servicing equipment. Some surfaces and components may be hot.

2.2 MACHINE START-UP AND SHUTDOWN PROCEDURE

IMPORTANT

If start-up and shutdown procedures are not followed, damage to the system and its components may occur.

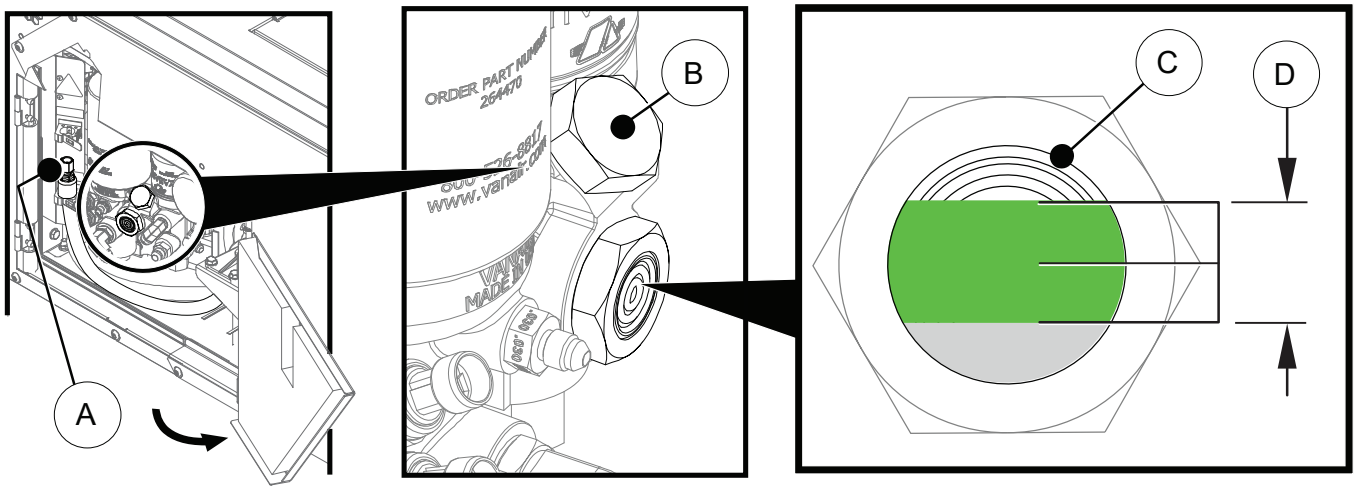

KEY	DESCRIPTION	KEY	DESCRIPTION
A	COMPRESSOR OIL DRAIN HOSE	C	COMPRESSOR OIL LEVEL SIGHT GLASS
B	COMPRESSOR OIL FILL PORT / CAP	D	COMPRESSOR OIL LEVEL RANGE [I]

[I] Check oil level with unit on level surface with the machine off. Proper oil level is between 1/4" and 3/4" of the sight glass (green zone shown). **DO NOT** overfill.

Figure 2-1: Compressor Oil Level Check

IMPORTANT

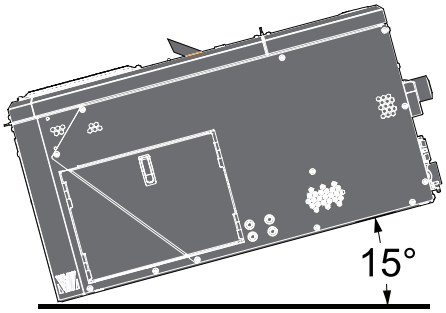

All machine package maximum operation angles of tilt are fifteen degrees (15°).

Consult ***Figure 2-2: Instrument Panel Functions*** for operating procedures detailed in this section.

2.2.1 START-UP FROM MACHINE

Consult ***Figure 2-2***, and the following steps:

⚠ WARNING

Machine hood and front access panel must be closed before starting.

IMPORTANT

Before initial start-up of machine consult *Section 3.4.4, Venting the Fuel Line*, and perform the engine fuel line procedure at the fuel filter for bleeding any trapped air from the fuel line.

1. Turn the key switch ON.

   The instrument panel HMI will initiate. Refer to the **Module Screens / Visual Control Guide** figures in this section (page **2 -10**) to become familiar with navigating the 330 Diesel controls.

2. Push the engage button [⏻] to start the engine.
3. Let engine run at idle for a 3-5 minutes to allow for warm up sequence. Machine will run at higher RPM for warm up, then will show notification when ready.

Continued on page 2 - 4...

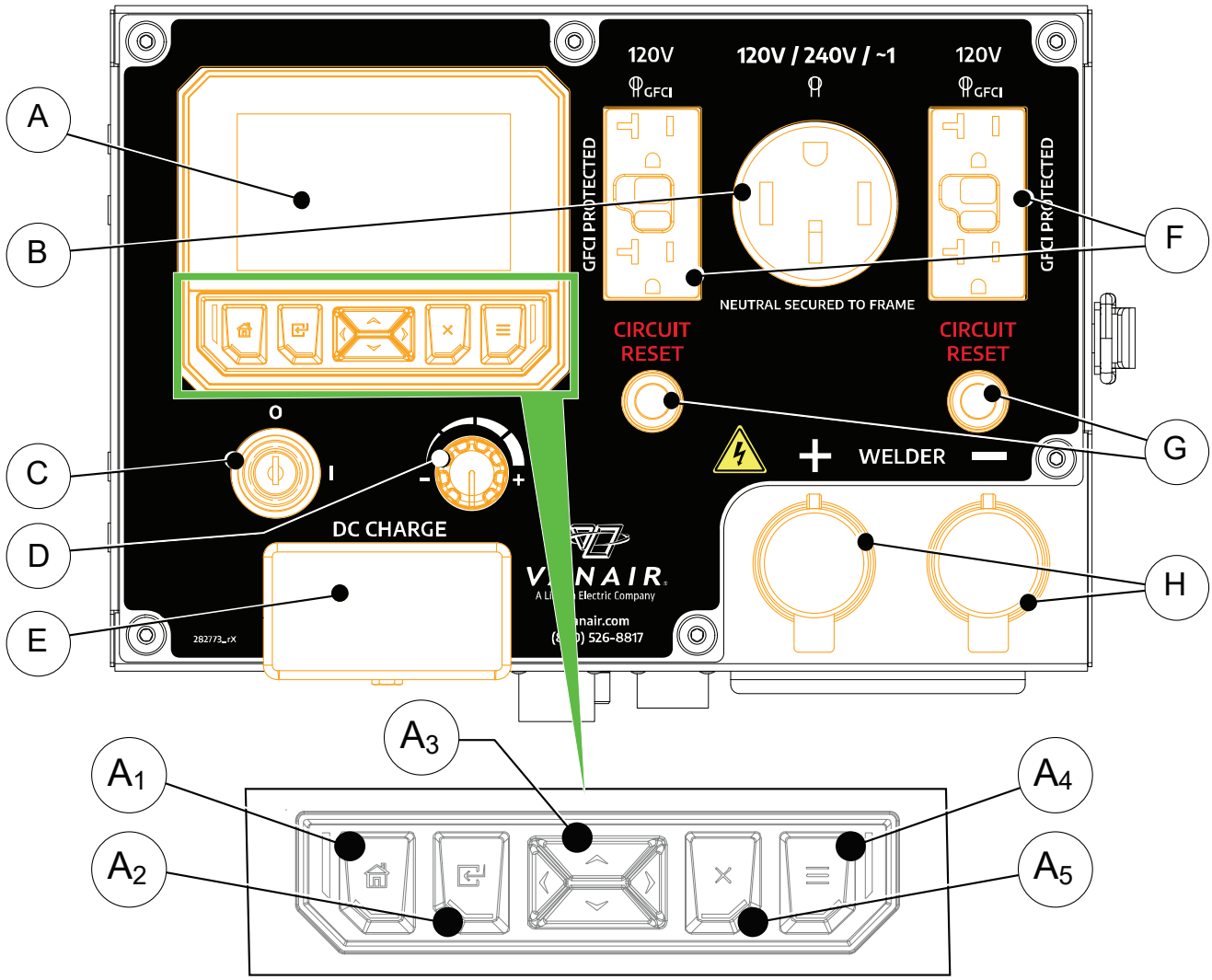

KEY	DESCRIPTION	KEY	DESCRIPTION
A	CONTROLLER DISPLAY MODULE (HMI)	**C**	IGNITION SWITCH
A_1	HOME SCREEN	**D**	ENCODER KNOB
A_2	SCREEN-DETERMINED INTERACTIVE FUNCTION	**E**	CHARGE/JUMP OUTPUT (COVERED BY CAP)
A_3	SCREEN NAVIGATION PAD	**F**	RECEPTACLE - 120V/20A
A_4	SCREEN-DETERMINED INTERACTIVE FUNCTION	**G**	CIRCUIT BREAKER - 20 AMP
A_5	SCREEN-DETERMINED INTERACTIVE FUNCTION	**H**	(CAPPED) WELDER LEAD CONNECTIONS (x2)
B	RECEPTACLE - 240V / 50A		

Figure 2-2: Instrument Panel Functions

Continued from page 2 - 2...

NOTE

Refer to the Engine Operation Manual for additional information pertaining to engine start-up.

2.2.2 MACHINE SHUTDOWN

Consult ***Figure 2-2***. To shut the engine off at any time, turn the key switch to the OFF position. However, this method is best reserved for emergency shutdown situations only. Vanair® recommends that the following procedure be used for routine shutdowns in order to keep the system in optimal condition, and minimize undue stress that may occur at the next start up session if some of the machine conditions were left in working mode(s) or had auxiliary power draws left intact (such as a tool receptacle left plugged into the generator, etc.).

To prepare the machine for shutdown:

1. Shut off any tools or other items that are drawing power from the generator, or compressed air.

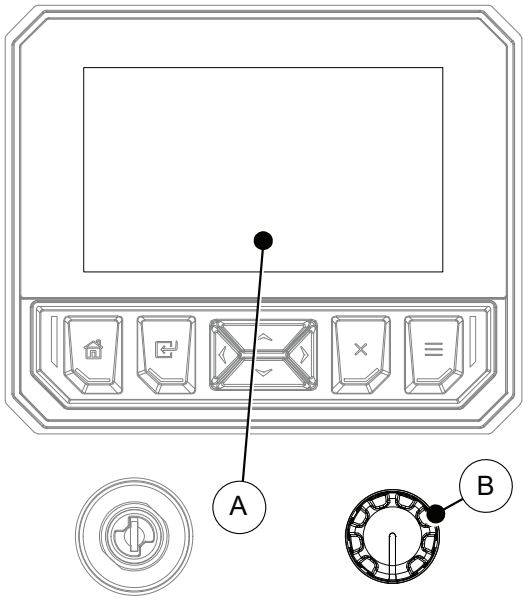

KEY	DESCRIPTION	KEY	DESCRIPTION
A	DIGITAL DISPLAY	B	ENCODER MANUAL CONTROL KNOB

Figure 2-3: Variable Integer Manual Adjustment Knob

2. Close all service valves.
3. Unplug any power cords that are plugged into the generator panel.
4. Allow machine to run at idle for 3-5 minutes to allow for a cool down sequence.

2.2.3 ⚠ EMERGENCY SHUTDOWN PROCEDURE

⚠ EMERGENCY SHUTDOWN

To shut the engine off at any time, turn the key switch to the OFF position.

IMPORTANT

Use this method ONLY for emergency cases: damage to the machine can occur if bypassing the standard shutdown procedure.

AFTER AN EMERGENCY SHUTDOWN:

Troubleshoot the problem **before** restarting the machine.

ALWAYS turn off or reset all functions, including turning off all service valves, that may have been active at the time the emergency shutdown occurred. Refer to ***Section 2.2.2 Machine Shutdown*** for pre-starting conditions of machine as guidance.

2.3 ENGINE THROTTLE CONTROL FUNCTIONS

Increased engine speed operation is due to the application of any active function. The engine will default to idle speed if no function is engaged.

IMPORTANT

Any combination of the Air N Arc® 330 Diesel ALL-IN-ONE Power System's output functions (welder, generator or compressor) used simultaneously will have an adverse affect on engine running at full throttle.

2.4 OPERATING THE WELDER

Consult ***Figure 2-3***. The rotary encoder adjusts the welder amperage (40 to 335 amps), or

voltage (15 to 30 volts) for the desired weld heat. Turning the rotary encoder clockwise increases the amperage or voltage, and turning the encoder counterclockwise decreases the amperage or voltage. The power dial may be adjusted while welding.

2.4.1 WELDER OPERATING PROCEDURE

⚠ WARNING

Before attempting any welding procedure, the operator must be aware of general safety practices, and particularly those pertaining to welding, as found in Section 1.4, Arc Welding Hazards, in the Safety Section of this manual.

2.4.1.1 CC (CONSTANT CURRENT) MODE

CC (Constant Current) Mode is commonly referred to as Stick Welding, Arc Welding, or Shielded Metal Arc Welding (SMAW).

1. With the engine shut off, insert the twist lock connections of the work clamp and the electrode holder cables into the welder connection ports on the control panel. For Direct Current Electrode Positive (DCEP), connect the electrode holder to the positive (+) port, and the work clamp to the negative (–) port.

⚠ DANGER

DO NOT weld with the electrode holder connected to the negative (-) port and the work piece connected to the vehicle. Bodily harm and equipment damage may occur.

2. Select the appropriate electrode for the material and process being performed. See **Table 2A: ELECTRODE SPECIFICATIONS** for selecting an electrode.
3. Place the ground clamp on the work piece and insert the appropriate welding rod into the electrode clamp.
4. Start the engine (See **Section 2.2, Machine Start-up and Shutdown Procedure**).

TABLE 2A: ELECTRODE SPECIFICATIONS

METAL THICKNESS	ELECTRODE SIZE	WELDING AMPERES
1/16-1/8	3/32	50-90
1/8-1/4	1/8	90-140
¼-3/8	5/32	120-180
3/8-1/2	3/16	150-230

5. On the HMI, select the desired mode. Activate by pressing the [⏻] button.
6. Adjust the encoder to the appropriate amperage setting for the material and the electrode being used. (See **TABLE 2A: ELECTRODE SPECIFICATIONS** for electrode amperage ratings). At anytime during welding, the encoder may be adjusted to the desired amperage level.
7. When you strike the electrode against the material being welded, the engine will go to high idle and deliver the selected amperage through the electrode. Welding can now begin.

NOTE

Engine will go to high speed once activated or as listed above, but only if the correct setting is selected.

NOTE

If a longer welding lead is desired, optional 25 and 50 ft. lead segments may be purchased from Vanair®, a Lincoln Electric Company, for a maximum lead length of 100 ft.

If a longer welding lead is desired, optional 25 and 50 ft. lead segments may be purchased from Vanair®, a Lincoln Electric Company, for a maximum lead length of 100 ft.

Consult Table 5B in Section 5 for option parts order information.

8. After a weld has been completed, and there is no contact between the electrode and the metal for 30 seconds, the engine will return to idle.

TABLE 2B: WELDING ROD TYPE, POLARITY AND FLUX CODES		
DIGIT	TYPE OF COATING	WELDING CURRENT
10	High cellulose sodium	DC+
11	High cellulose potassium	AC or DC+ or DC-
12	High titania sodium	AC or DC-
13	High titania potassium	AC or DC+
14	Iron powder titania	AC or DC- or DC+
15	Low hydrogen sodium	DC+
16	Low hydrogen potassium	AC or DC+
27	Iron powder iron oxide	AC or DC+ or DC-
18	Iron powder low hydrogen	AC or DC+
20	High iron oxide	AC or DC+ or DC-
22	High iron oxide	AC or DC-
24	Iron powder titania	AC or DC- or DC+
28	Low hydrogen potassium iron powder	AC or DC+

What the numbers mean that are used to identify a stick welding electrode:

Using E6010 for an example...

The “E” indicates Electrode because some welding rods are not electrodes. The “60” in 6010 indicates the tensile strength in psi. 60,000 labs.

The last two (2) digits indicate position and polarity along with what type flux. See **TABLE 2B: WELDING ROD TYPE, POLARITY AND FLUX CODES**.

2.4.1.2 CV (CONSTANT VOLTAGE) MODE - USING A VOLTAGE SENSING SUITCASE FEEDER OR SPOOL GUN

CV (Constant Voltage) Mode is commonly referred to as: Wire Welding, MIG Welding, or Gas Metal Arc Welding (GMAW)

1. With the engine shut off, insert the twist lock connection of the ground clamp into the negative (-) welder connection port on the control panel. Insert the power lead segment from the suitcase feeder into the positive (+) welder connection port on the control panel.
2. Place the work clamp from the suitcase feeder and the work clamp from the Air N Arc® 330 Diesel on the work piece.
3. Start the engine (See **Section 2.2, Machine Start-up and Shutdown Procedure**).
4. On the control panel, place the DC Charger/ Welder switch in welder mode. Place the CC/ CV switch in CV mode HMI selection.
5. Adjust the encoder knob on the Air N Arc® 330 Diesel to the appropriate voltage setting for the material being welded. Adjust the encoder on the suitcase feeder for the material being welded. At anytime during welding, the encoder knob may be adjusted to the desired voltage level.

2.5 OPERATING THE GENERATOR

⚠ WARNING

Identifies actions or conditions which may cause death, severe injury, equipment damage or destructive malfunctions.

The thermal overload circuit breakers on the generator require time to overheat when the generator is operating in an overload condition — they DO NOT provide instant protection against short circuiting or overload conditions. Always use GFCI protected extension cords and power strips when using the generator.

IMPORTANT

The Air N Arc® 300 Diesel is designed to support a multi-function project. However, if the generator is operating at a high percentage of its rated capacity, and the welder and air compressor are also being used, the resulting drop in engine speed may produce a low voltage condition that will damage the generator and power tools being used.

IMPORTANT

Only plug power cords into the generator receptacles AFTER the engine is running at full speed.

Be careful not to overload the rated capacity of the generator - 10,000 watts (42 amps @ 240V) continuous.

TO OPERATE THE GENERATOR:

1. Start the engine.

2. With the engine warmed up and operating in low idle, plug in a load.

Combined output on all generator receptacles is limited to the total rated generator capacity. For example; if 1,500 watts (12.5 amps) is being drawn on the 120V duplex receptacle, only 8,500 watts (35.4 amps) is available at the 240V receptacle. Check the desired power tool, motor or extension cord manufacturer's specifications for general information on the power requirements of common power tools, motors and extension cords in order to confirm power draw limitations.

If the thermal overload circuit breakers on the generator are tripped due to an overload condition, press the white reset buttons on the generator panel to reset the breakers (see ***Figure 2-4***).

⚠ WARNING

If one of the generator circuit breakers is tripped, the cause of the overload must be determined before the circuit breaker is reset and work is resumed.

2.6 OPERATING THE COMPRESSOR

NOTE

The Air N Arc® 330 Diesel unit features a high pressure, 150 PSI air system.

Continued...

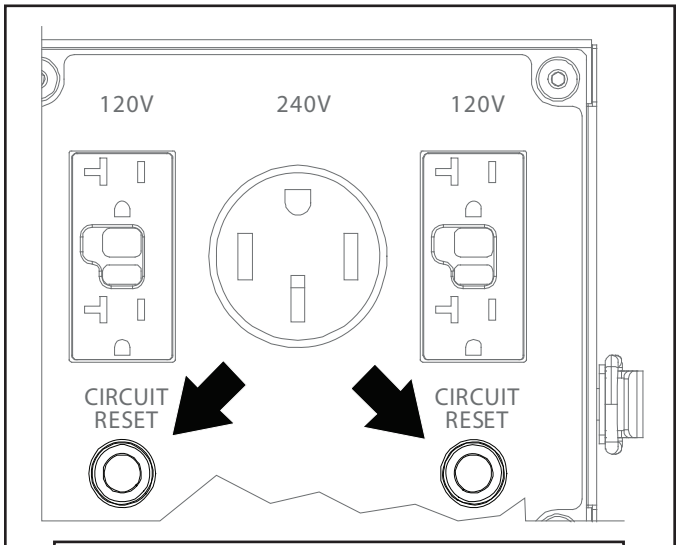

Figure 2-4: Resettable Circuit Breakers

NOTE (continued)

Check the maximum air pressure rating on the air tools being used. The operator is responsible for regulating the air pressure when necessary (refer to the Compressor Configuration access on the control module in the *Module Screens / Visual Control Guide* in Section 4).

NOTE

The pressurized air system requires routine maintenance. See Table 3A, Maintenance Schedule, in Section 3 to learn about important maintenance procedures.

NOTE

The moisture drain valve on the air tank may be accessed at any time, including while the machine is in operation.

IMPORTANT

For systems operating in high-moisture areas, refer to *Section 2.6.1, High Moisture Condition Emulsification of Oil in Rotary Screw Compressor Systems* and Table 2C, before starting the system.

TO OPERATE THE AIR COMPRESSOR:

1. Start the engine as per ***Section 2.2.1***.
2. With the engine warmed up and operating in low idle, either turn the rotary encoder from HOME, or on the control panel activate from [⏻] menu to the ON position.

When purchasing air tools or planning a project, the rated capacity of the compressor will need to be taken into consideration. In regard to air tool compressed air requirements, check the desired power tool manufacturer's specifications.

2.6.1 HIGH MOISTURE CONDITION: EMULSIFICATION OF OIL IN ROTARY SCREW COMPRESSOR SYSTEMS

Refer to **TABLE 2C** and the following. A serious condition may occur in operating environments that contain high levels of moisture, whereby condensation can occur within the oil system, and

TABLE 2C: HIGH MOISTURE CONDITION OPERATION		
SYMPTOM	**CAUSE**	**PREVENTION / CORRECTIVE ACTION**
Emulsification of oil in compressor system: • Compressor oil is milky white in color • Compressor oil is broken down and lacks lubricity. • Compressor oil may develop solid chunks or clumps	**Operating the compressor system for short periods of time:** • Short cycling prevents the temperature of the oil from attaining a high enough temperature capable of vaporizing the moisture droplets. • Total minimum system moisture purge run time of approximately 20 minutes is recommended. **Not allowing compressor to warm up to 180°F operating temperature:** • This can keep the oil temperature from getting hot enough to vaporize the moisture droplets, preventing the moisture from being able to escape the system. Additionally, there is no path for the moisture to escape the system. **The temperature switch is faulty and activating the cooling fan too soon:** • This prevents the oil from attaining a high enough temperature capable of vaporizing the moisture droplets. **The air filter is saturated with water:** • This forces moisture to be ingested by the compressor. **Any of the above causes will be exacerbated in especially humid environments.**	**RECOMMENDED CHANGES:** If the problem is not corrected by standard operating practices and regular preventative maintenance, consider the following: • If operating below 175°F, replace thermal valve element. • Change the operating procedure to allow for the compressor oil temperature to reach 180 °F before discharging any air. If the compressor isn't discharging any air, it's not ingesting any potentially humid air. It will build pressure upon initial startup, but then it will run closed and allow it to heat up. **REPAIR/MAINTENANCE:** Refer to **Section 3** of the Operation Manual for inspection, cleaning, and repair instructions. Once the compressor oil becomes emulsified, it must be replaced along with the oil filter. Depending on the severity, other parts might also need to be replaced. 1. Check that the separator element is in good, working condition. 2. Check that the scavenge line is working properly. 3. If the system is badly contaminated, Vanair® recommends a lube flush that will help clean out any remaining contamination throughout the system. Consult Vanair® Service Department for lube flush instructions. Check the moisture drain frequently on the air tank reservoir, to alleviate moisture build-up.

possibly lead to emulsification of the lubricant. Emulsification occurs when the system's oil absorbs moisture present in the operation system via condensation.

If the condition persists, Contact the Vanair® Service Department.

Consult the information in **Section 2.6.1.1** and ***Section 4.2.1*** for preventative and corrective actions necessary to take for high moisture ambient environment operation.

2.6.1.1 PREVENTION OF EMULSIFICATION

1. Start the machine normally.
2. **DO NOT** immediately engage service air when full load is reached; allow the system to first warm up to180°F. This warm-up period allows the moisture within the system to vaporize.
3. After temperature reaches 180°F, open service valve and discharge air for approximately ten (10) minutes to purge the system of moisture vapor.
4. A recommended minimal interval of 20 minutes should be allowed for total system vapor purge run time, including all phases from warm up through machine venting.

2.6.1.2 INFREQUENT USE

In some installations the compressor may not be regularly used. In order to ensure the compressor system is maintained in working order, the compressor should be started and run at least once per month. Follow the procedure outlined in **Section 2.6.1.1** on a once per month basis.

Be sure to follow all fluid and filter maintenance as outlined in this manual following the recommended change intervals. In cases whereby the machine is scheduled to be idle for long periods of time, consult **Section 5.5, Storage and Intermittent Use** for long idle preparation.

2.7 OPERATING THE BATTERY BOOSTER/CHARGER

The Vanair® state-of-the-art battery charging module and the optional battery charging cables add further versatility to the Air N Arc® 330 Diesel. The battery charging system operates off the DC generator, and not the main AC power generator.

⚠ WARNING

NEVER disconnect boosting connections or cables while charging /boosting. This will cause a voltage spike on the machine. Failure to follow this warning can result in injury, and/ or damage or failure of any or all electronic components, thus voiding the warranty of the machine.

⚠ CAUTION

Exposed high pressure air lines on the unit become hot during operation—keep everyone clear.

IMPORTANT

System will not give output without being connected to a battery.

IMPORTANT

Never leave the machine unattended while charging a battery. Always carefully monitor the charging system while it is in use; the high amperage level that the unit produces can damage the battery being charged, or the other components, if the unit is left connected for an extended period of time.

IMPORTANT

Any combination of the 330 Diesel output functions (compressor, generator and welder) used simultaneously will have an adverse affect of engine running at full throttle.

During charging, if the machine begins to cycle between high and low idle, then the battery is fully charged.

2.7.1 CONNECTION - DISCONNECTION SEQUENCE AND OPERATION

⚠ WARNING

Always wear a face shield when connecting or disconnecting battery charging cables, and always follow the connection and disconnection sequence. Electrical sparks can cause a battery to explode, resulting in serious injury.

IMPORTANT

To prevent damaging voltage spikes, the vehicle battery cables must be disconnected from the battery to be charged in any vehicle equipped with a computer, or any equipment with sensitive electronic components.

Failure to follow this warning can result in damage or failure of any or all electronic components of the vehicle.

IMPORTANT

Never attach boost cables to the panel before attaching to the battery. Always attach cables to the battery first.

1. With the engine off, insure that the welder, DC charger switch, and any other engine control switch are in the OFF position.
2. Attach the clamps of the battery charge cable to the battery to be charged. RED to the positive terminal, BLACK to the negative terminal (***Figure 2-5***).
3. Plug the battery charge cables into the battery cable connection.
4. Start the engine and wait for all indicator lights to turn off. The battery is being charged. 12V charge will stay at low speed.

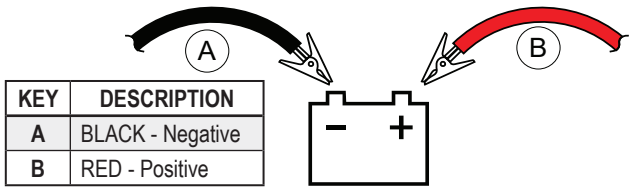

KEY	DESCRIPTION
A	BLACK - Negative
B	RED - Positive

Figure 2-5: Battery Cable Connections

5. To disconnect the charging system, push the [⏻] button.
6. Allow engine to idle down, then shut down the engine.
7. Now it is safe to disconnect the clamps from the battery being charged, and the battery cable connection on the front of the machine.

2.8 EXTREME CONDITIONS

When operating in extreme cold or hot conditions, at a high altitude, or in the presence of high humidity, extra attention should be given to any indication that could lead to a serious problem. Preventative safeguards exist that can minimize the possibility of malfunctions that are prone to occur under certain ambient conditions. Refer to **Section 4.3, Extreme Condition Operation**, for additional information on variable ambient operating conditions, and adjustment adaptations that can be made accordingly.

Module Screens / Visual Control Guide - Page 1 of 6

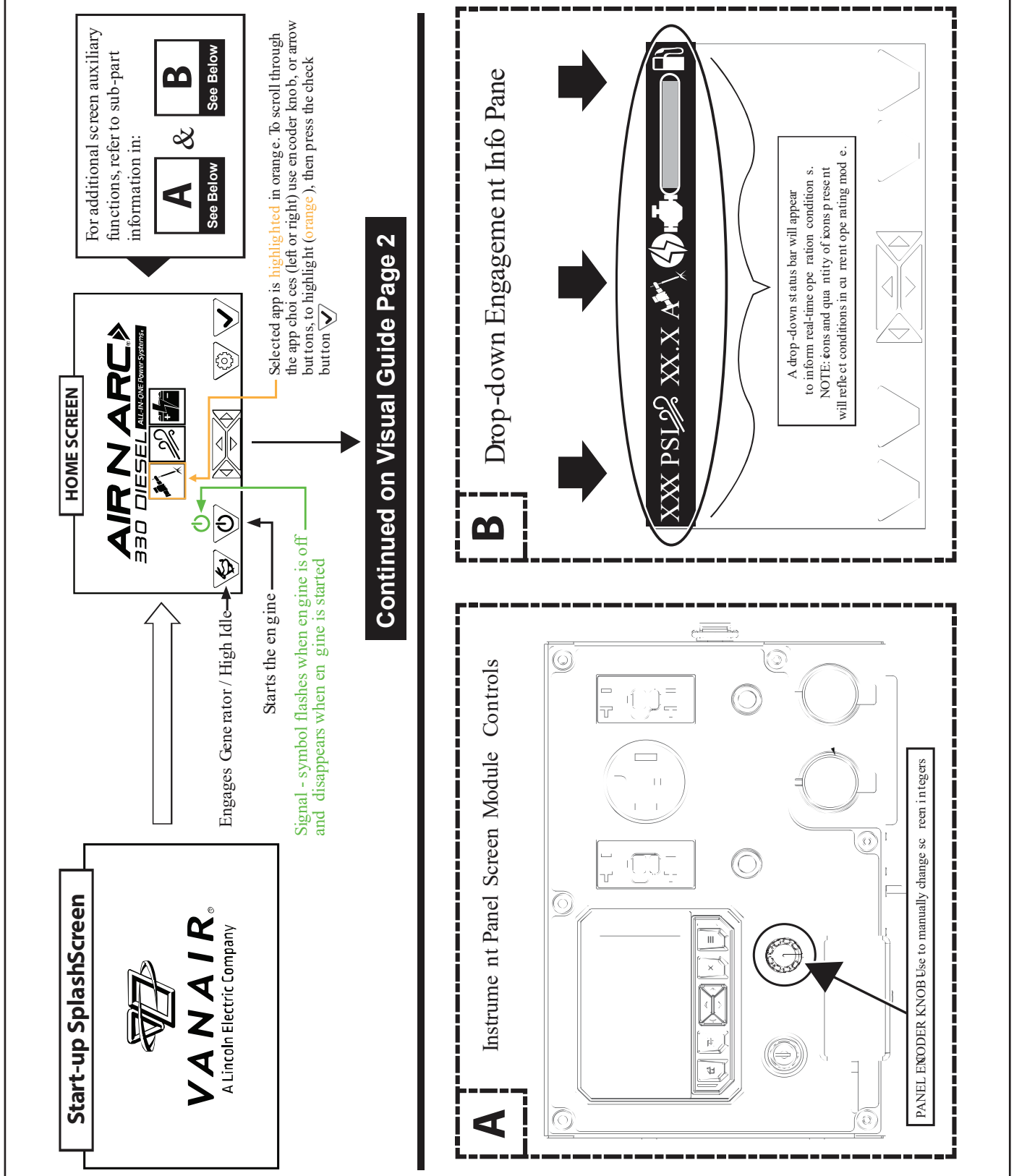

Initial Starting Screens; Sub-Parts "A" and "B"

Module Screens / Visual Control Guide - Page 2 of 6

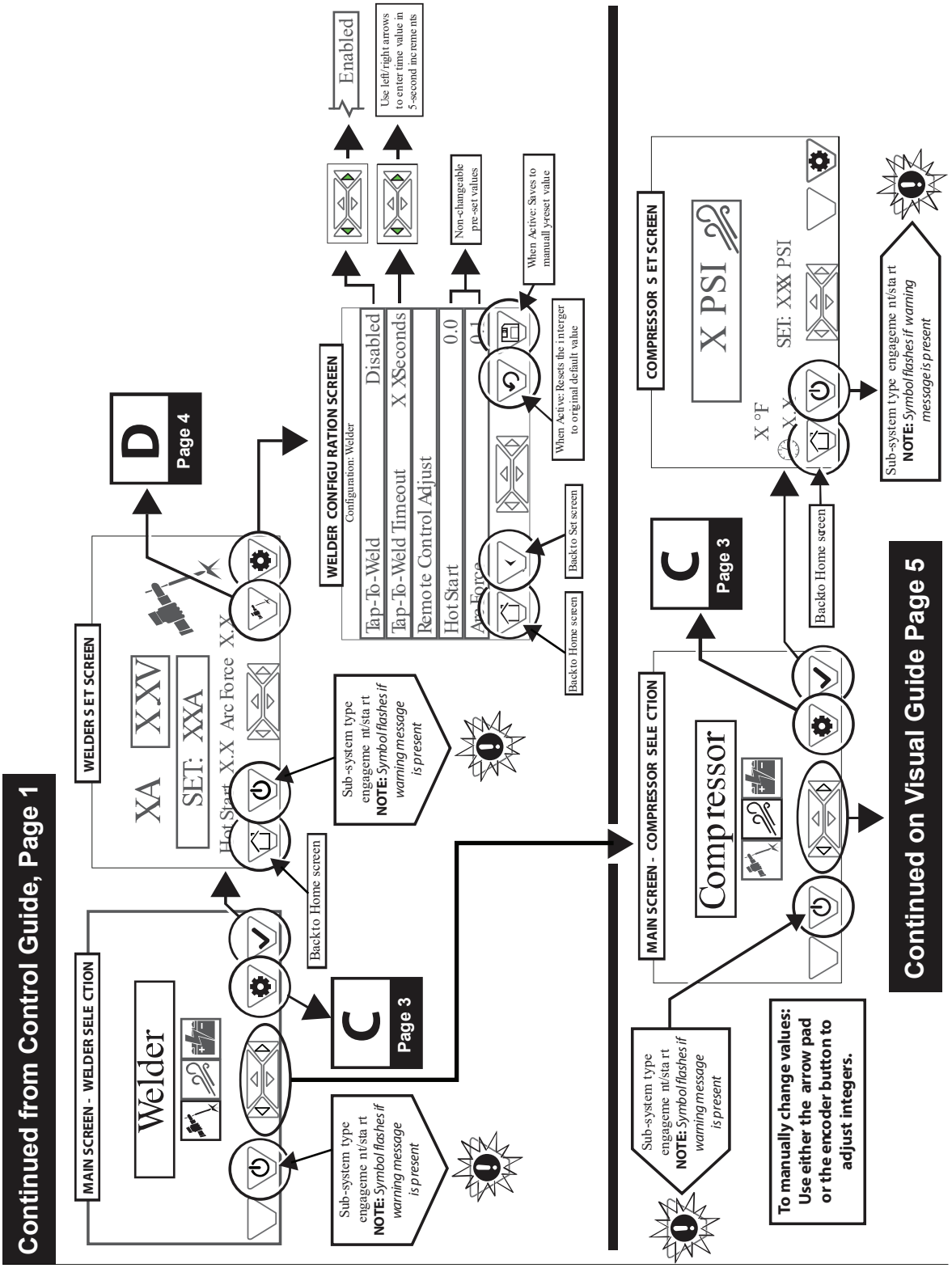

Welder / Compressor / Charge Initial-Level Screen Engagement/Interaction

Module Screens / Visual Control Guide - Page 3 of 6

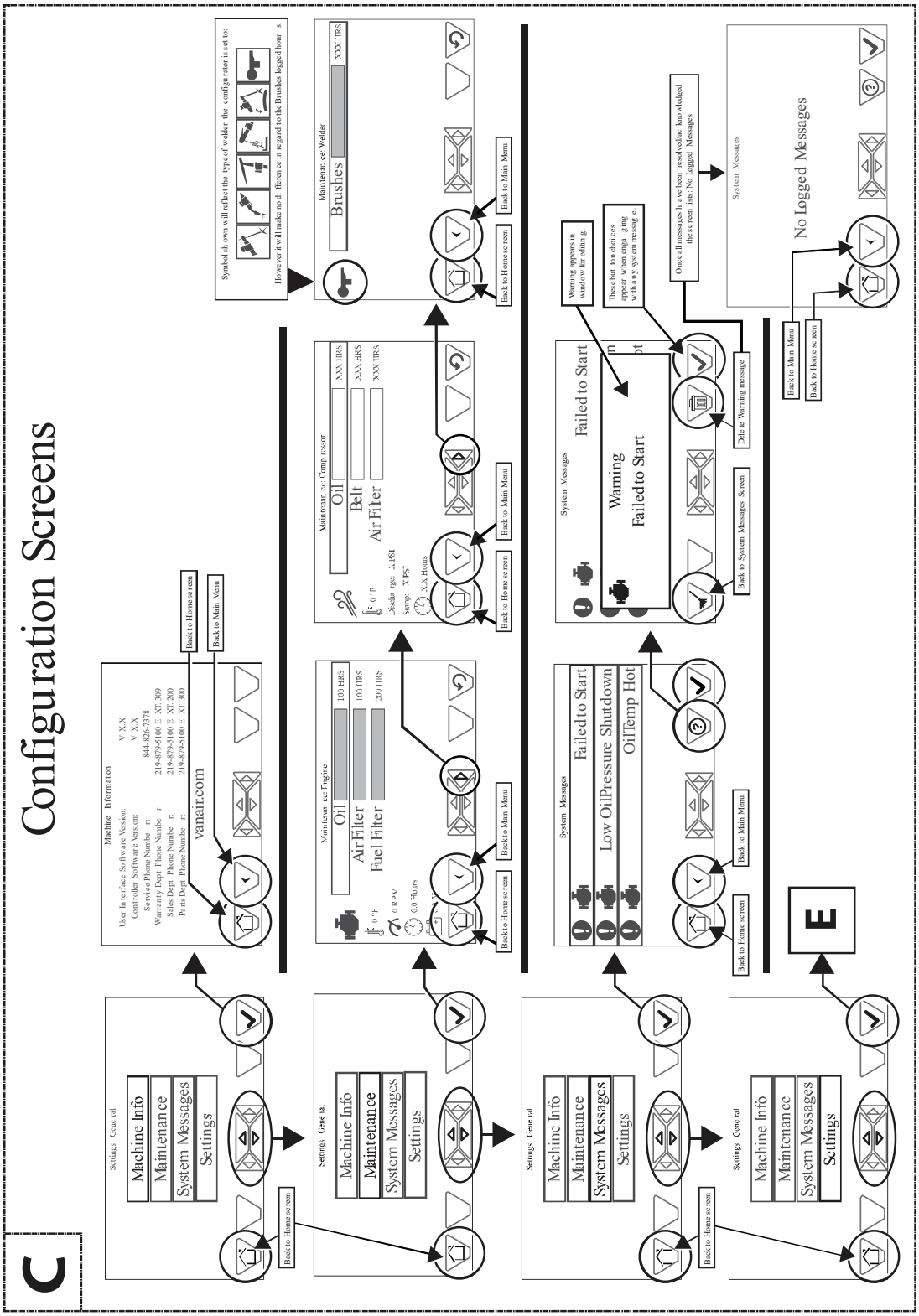

Sub-Screen "C" - Configuration Engagement/Interaction

Module Screens / Visual Control Guide - Page 4 of 6

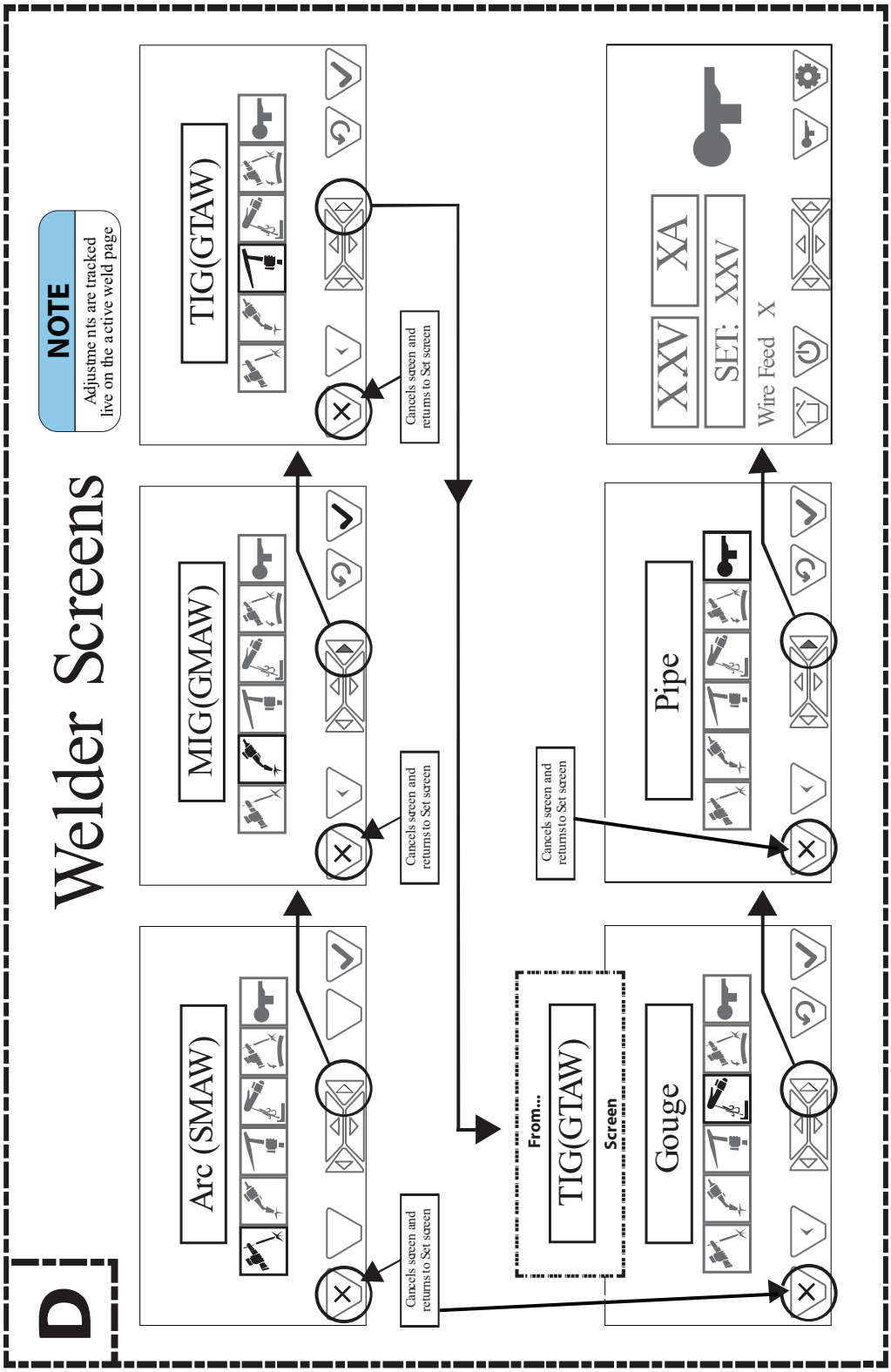

Sub-Screen "D" - Welder Engagement/Interaction

Module Screens / Visual Control Guide - Page 5 of 6

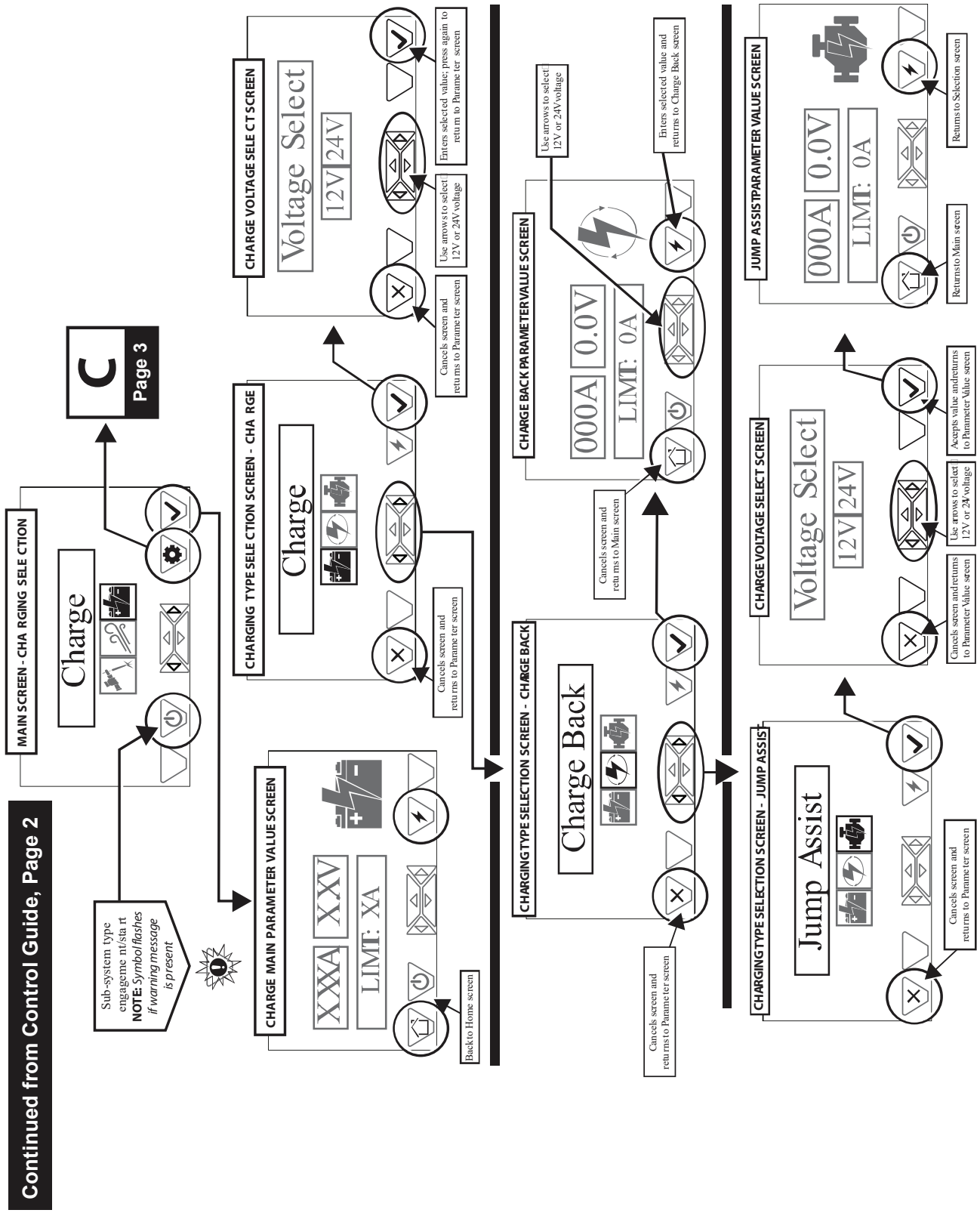

Welder / Compressor / Charge Initial-Level Screen Engagement/Interaction

Module Screens / Visual Control Guide - Page 6 of 6

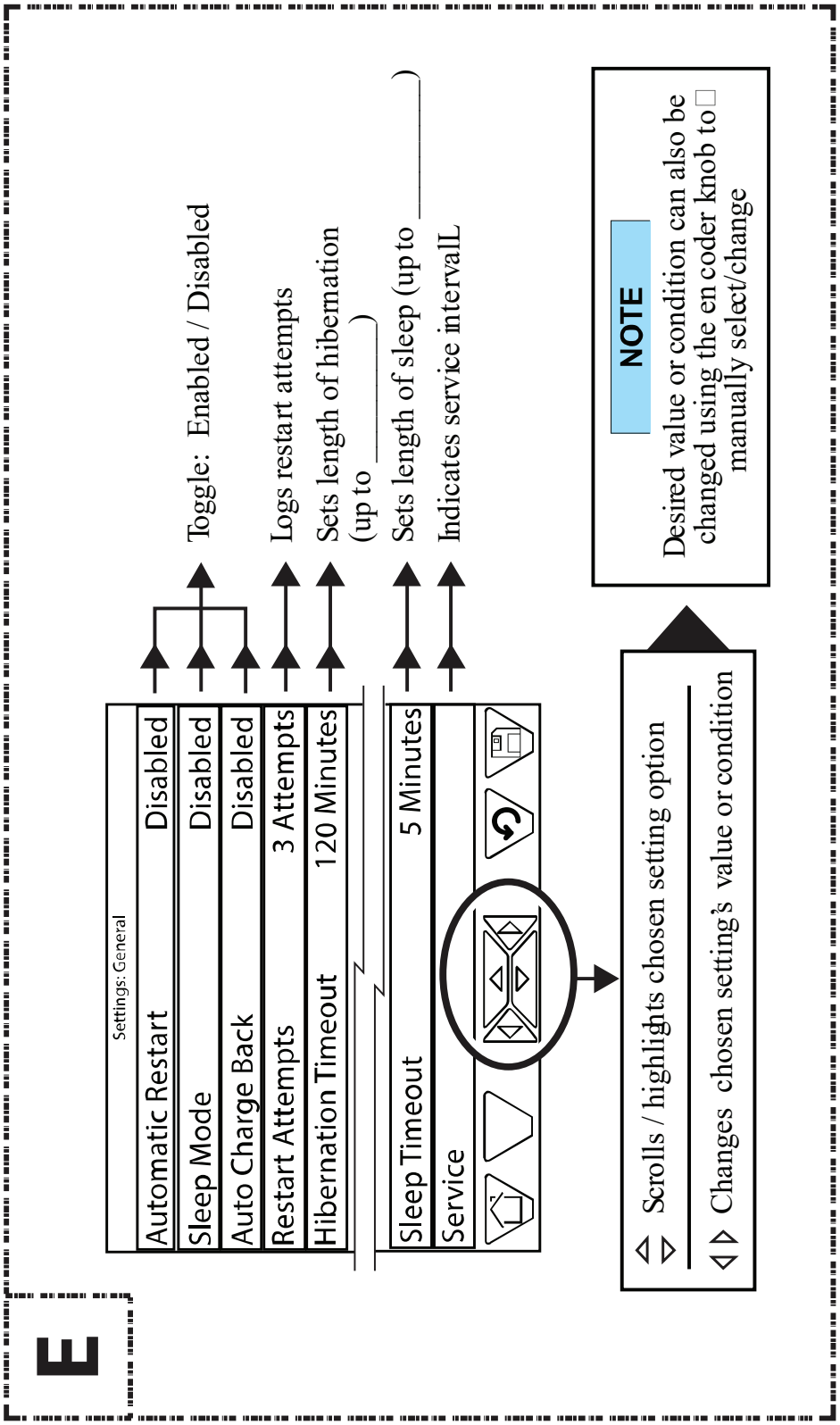

Sub-Screen "E" - Configurations Engagement/Interaction

SECTION 3: MAINTENANCE

3.1 GENERAL INFORMATION

A strict maintenance program is the key to long life for the Air N Arc® 330 Diesel ALL-IN-ONE Power System®. Following is a program that, when adhered to, should keep the package in top operating condition. Refer to **Table 3A: Routine Maintenance Schedule** in this section for a detailed maintenance routine schedule for specific compressor system components.

⚠ WARNING

Before performing maintenance:

Shut down machine, relieve all system pressure and lock out all power, as per the Safety Section of this manual. If machine is hot, allow package to cool before removing any panel.

NOTE THAT THE SYSTEM CAN BE STARTED REMOTELY:

Always clearly tag the start-up instrumentation against accidental system start-ups during maintenance.

⚠ WARNING

Follow all applicable safety recommendations DO NOT remove caps, plugs and/or other components when compressor is running or pressurized. Stop compressor and de-pressurize system prior to maintenance of system. Relieve the entire system pressure by opening the air tank drain/vent valve, which will vent all pressure to the atmosphere.

Wear personal protective equipment such as gloves, work boots, and eye and hearing protection as required for the task at hand.

Refer to *Figure 3-1*. Open compressor fill cap SLOWLY (contents under pressure) to make sure all pressure has been relieved.

⚠ WARNING

Follow all applicable safety recommendations as outlined in Section 1: Safety of this manual.

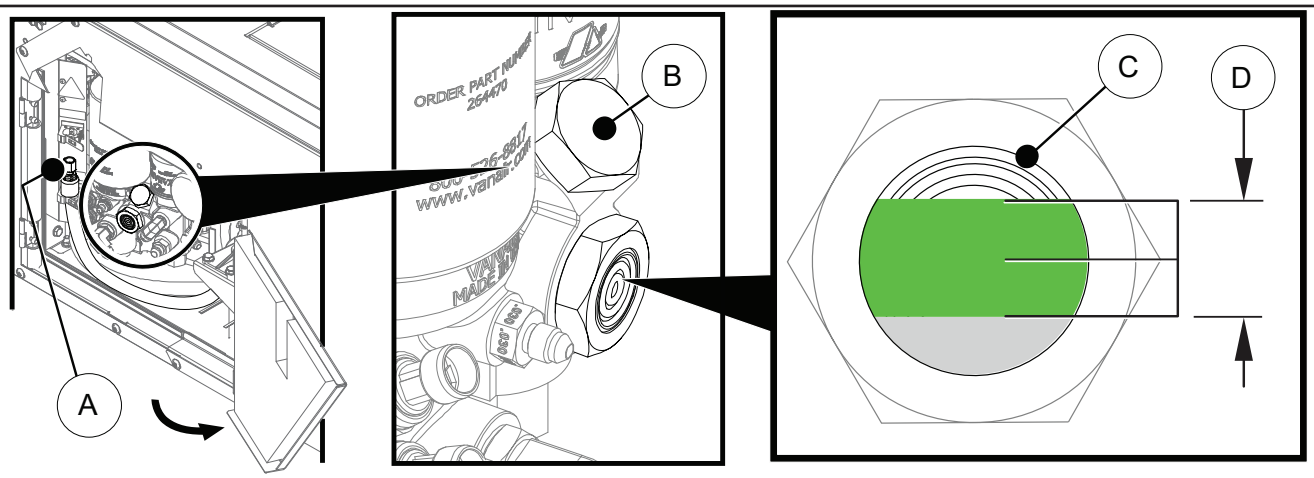

KEY	DESCRIPTION	KEY	DESCRIPTION
A	COMPRESSOR OIL DRAIN HOSE	C	COMPRESSOR OIL LEVEL SIGHT GLASS
B	COMPRESSOR OIL FILL PORT / CAP	D	COMPRESSOR OIL LEVEL RANGE [I]

[I] Check oil level with unit on level surface with the machine off. Acceptable level is between 1/4" and 3/4" of the sight glass (green zone shown). **DO NOT** over fill.

Figure 3-1: Compressor Oil Level Check

3.2 ROUTINE MAINTENANCE SCHEDULE

Vanair®, a Lincoln Electric Company, considers the maintenance schedule given in **Table 3A: Routine Maintenance Schedule** to be part of the warranty agreement with the customer. This maintenance regimen must be followed in order to protect the warranty of the machine package.

Vanair®, a Lincoln Electric Company, especially requires that a consistent service regimen be established for engine and compressor oil changes, and engine and compressor air filter servicing. The following schedule is designed so that many of the other maintenance tasks are completed when the engine and compressor air filters are serviced, and the engine oil is changed.

NOTE

Follow the prescribed periodic maintenance (PM) schedule as recommended. Perform the required PM schedule at recommended intervals. Failure to follow this prescribed periodic maintenance at the recommended intervals will impair the package safety, performance characteristics, shorten the package's life, and will negatively affect the warranty coverage of the package.

Note that more frequent intervals may be needed in adverse operating conditions (refer to Section 2.8, Extreme Conditions, and Section 4.3 Extreme Condition Operation).

IMPORTANT

Consult the Engine Operation Manual for further detailed maintenance and interval descriptions in addition to the information given in Table 5A.

⚠ WARNING

Concerning the engine: In addition to the safety measures given in this manual, the operator must also be acquainted with the safety measures given in the Engine Operation Manual.

Please take a moment to become acquainted with the following service schedule. For assistance in obtaining routine maintenance or replacement parts, consult **Section 5.1, Parts Ordering Procedure**, and **Table 5A: Recommended Spare Parts List**.

3.3 REPLACEMENT PARTS

Replacement parts should be purchased through your local Vanair® representative or where the 330 Diesel was purchased. If, for any reason, parts are not available in this manner, they can be purchased through Vanair® directly.

NOTE

For assistance when ordering new replacement parts, consult Section 5.1, Parts Ordering Procedure, and Table 5A: Recommended Spare Parts List.

Vanair®, a Lincoln Electric Company
10896 West 300 North
Michigan City, IN 46360
Toll Free: (800) 526-8817
Telephone: (219) 879-5100
Service (toll free): (844) VAN-SERV
(844) 826-7378
vanair.com

NOTE

If additional spare parts are being stored for future use, make certain that they are stored in proper containers that allow for protection against contamination, and kept in a clean area of moderate temperature reading. For information on storing the machine package for periods of non-use, consult Section 3.5, Storage and Intermittent Use.

Continued on page 3 - 16...

TABLE 3A: MACHINE MAINTENANCE SCHEDULE INTERVALS

⚠WARNING

Before performing maintenance: Shut down machine, relieve all system pressure and lock out all power, as per the Safety Section of this manual.

NOTE THAT THE SYSTEM CAN BE STARTED REMOTELY: Always clearly tag the start-up instrumentation against accidental system start-ups during maintenance.

INTERVALS - Refer to **IMPORTANT** message under **Table 3B**

KEY	TASK DESCRIPTION	BREAK-IN PERIOD First 50 Hours	DAILY	Every 50 Hours	Every 200 Hours	Every 400 Hours	Every 500 Hours or annually	Every 1000 Hours	Every Two (2) Years	ACTION TO TAKE / REFERENCE
1	**BREAK-IN: COMPRESSOR** **Change compressor oil, oil filter & separator elements, and air filter element (if necessary)**	■								

REFERENCE (TYPICAL):

- Air Filter Element [↑]
- Separator Element [↓]
- Oil Filter Element [→]
- Oil Level Sight Glass [↘]
- Optimal Oil Level Range [↕] [I]
- Oil Fill Port / Cap [↙]
- Oil Drain Hose (Location) [↖]
- Oil filter seal [↗]

[I] Optimal oil level is between 1/4 - 3/4 of sight glass. **DO NOT TOP OFF AT THE FILL PORT / DO NOT OVERFILL** - use the sight glass only to determine proper compressor oil level.

TABLE 3B: ROUTINE MAINTENANCE REPLACEMENT KITS [I]

KEY NO.	DESCRIPTION	QTY
KIT1154-01	Kit, Engine Service - filters [air pre-cleaner, air, oil, fuel], and motor oil [II]	1
KIT1505	Kit, Compressor First 50 Hour Service - Vanguard™ oil [1 gal], oil filter [II]	1
KIT1501	Kit, Compressor 500 Hour Service - air filter, Vanguard™ high pressure oil [1 gal], oil & separator elements [II]	1

[I] If working in dusty or dirty conditions, reduce the recommended time intervals between servicing by half for engine and compressor oil change, and engine and compressor filter servicing.

[II] Refer to **Section 5, Table 5A** for kit content item identification, and additional replacement parts items.

PLEASE NOTE: WHEN ORDERING PARTS, INDICATE MACHINE SERIAL NUMBER.

IMPORTANT

Operator should also consult the Maintenance Intervals in the Engine Operation manual.

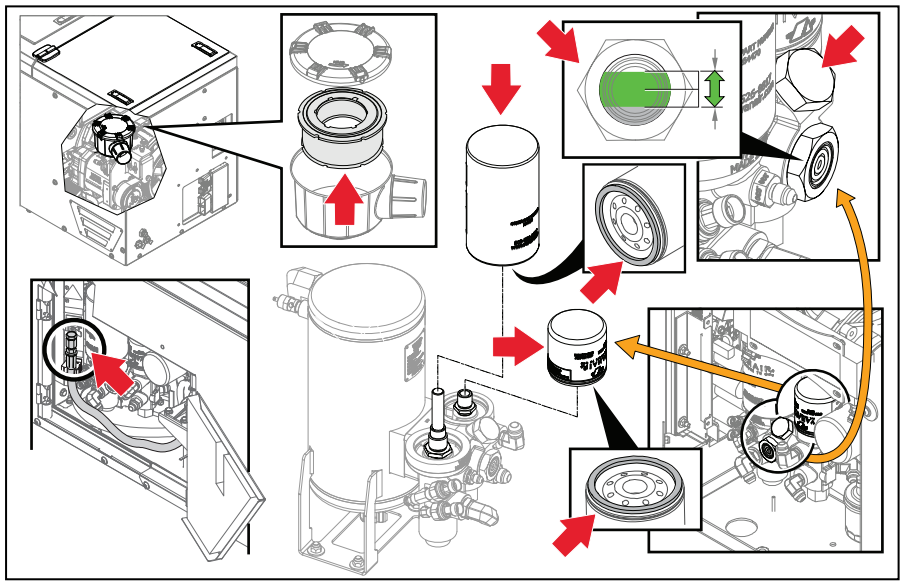

PROCEDURE:

Order the First 50 hour kit **no. KIT1505**, or the 500 hour replacement kits (Refer to **Table 3B** for reorder number). Replace the compressor filter and oil at the first 50, and at every 500 hour interval.

Disengage and remove cap from the oil drain hose [↖]. Allow oil to completely drain from the compressor unit into environmentally safe (and adequately-sized [gallon or more] container). Replace plug.

Remove the oil filter element [→], and the separator element [↓] using an oil filter wrench.

...Continued next page...

TABLE 3A: MACHINE MAINTENANCE SCHEDULE INTERVALS

⚠WARNING

Before performing maintenance: Shut down machine, relieve all system pressure and lock out all power, as per the Safety Section of this manual.

NOTE THAT THE SYSTEM CAN BE STARTED REMOTELY: Always clearly tag the start-up instrumentation against accidental system start-ups during maintenance.

INTERVALS - Refer to **IMPORTANT** message under **Table 3B**

KEY	TASK DESCRIPTION	BREAK-IN PERIOD First 50 Hours	DAILY	Every 50 Hours	Every 200 Hours	Every 400 Hours	Every 500 Hours or annually	Every 1000 Hours	Every Two (2) Years	ACTION TO TAKE / REFERENCE
1	**BREAK-IN: COMPRESSOR** **Change compressor oil, oil filter & separator elements, and air filter element (if necessary) (continued)**	■								***..continued from previous page...*** **PROCEDURE (CONTINUED):** **NOTE** **Coat element sealing ring on new oil filter and new separator elements with a film of compressor oil before securing in place, to assure a complete seal.** Seat the new oil filter element to the oil filter element post. Seat the new separator element to the separator element post. Tighten both elements by hand until they fit snugly, then an additional quarter turn or so with the filter wrench. Remove the oil fill port cap [↘] and add oil necessary at the oil fill port, but take caution to fill slowly in order to avoid overfill. Use the sight glass oil range shown in the figure [←] to achieve proper level. **DO NOT** overfill; **DO NOT** mix different oil types. Replace cap. Dispose of the replaced filters (oil and separator elements), and discarded oil within the safety parameters of local environmental guidelines. Inspect the compressor air filter element as per **Key #6** in this table (**Table 3A**). Replace if necessary.
2	**BREAK-IN: ENGINE** **Change engine oil and filter, and air filter element (if necessary)** **REFERENCE (TYPICAL):** • Engine Oil Fill Port / Cap [↘] • Engine Oil Filter Element [↖] • Dip Stick Oil Range [↙] • Element Seal Ring [←] [I] • Engine Fuel Filter [↑] • Engine Dip Stick/Oil Level Gauge [→] • Engine Oil Drain Hose (Location) [↗] [I] Coat the element seal ring with a light film of compressor.	■								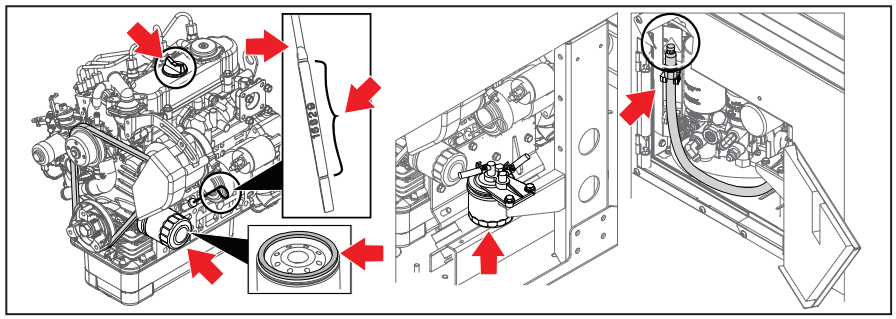 **PROCEDURE:** Consult the Engine Operation Manual for oil change instructions. For part replacement order full engine service kit **no. KIT1154-01**, or by individual part (refer to **Table 5A** for individual kit part breakdown). ***..Continued next page...***

TABLE 3B: ROUTINE MAINTENANCE REPLACEMENT KITS [I]

KEY NO.	DESCRIPTION	QTY
KIT1154-01	Kit, Engine Service - filters [air pre-cleaner, air, oil, fuel], and motor oil [II]	1
KIT1505	Kit, Compressor First 50 Hour Service - Vanguard™ oil [1 gal], oil filter [II]	1
KIT1501	Kit, Compressor 500 Hour Service - air filter, Vanguard™ high pressure oil [1 gal], oil & separator elements [II]	1

[I] If working in dusty or dirty conditions, reduce the recommended time intervals between servicing by half for engine and compressor oil change, and engine and compressor filter servicing.

[II] Refer to **Section 5, Table 5A** for kit content item identification, and additional replacement parts items.

PLEASE NOTE: WHEN ORDERING PARTS, INDICATE MACHINE SERIAL NUMBER.

IMPORTANT

Operator should also consult the Maintenance Intervals in the Engine Operation manual.

TABLE 3A: MACHINE MAINTENANCE SCHEDULE INTERVALS

⚠ WARNING

Before performing maintenance: Shut down machine, relieve all system pressure and lock out all power, as per the Safety Section of this manual.

NOTE THAT THE SYSTEM CAN BE STARTED REMOTELY: Always clearly tag the start-up instrumentation against accidental system start-ups during maintenance.

INTERVALS - Refer to **IMPORTANT** message under **Table 3B**

KEY	TASK DESCRIPTION	BREAK-IN PERIOD First 50 Hours	DAILY	Every 50 Hours	Every 200 Hours	Every 400 Hours	Every 500 Hours or annually	Every 1000 Hours	Every Two (2) Years	ACTION TO TAKE / REFERENCE
2	**BREAK-IN: ENGINE** **Change engine oil and filter, and air filter element (if necessary) (continued)** **REFERENCE (TYPICAL):** • Engine Oil Fill Port / Cap [↘] • Engine Oil Filter Element [↖] • Dip Stick Oil Range [↙] • Element Seal Ring [←] [I] • Engine Fuel Filter [↑] • Engine Dip Stick/Oil Level Gauge [→] • Engine Oil Drain Hose (Location) [↗] [I] Coat the element seal ring with a light film of compressor.	■								*..continued from previous page...* **PROCEDURE (continued):** 1. Check the engine oil level before starting, or more than 5 (five) minutes after stopping the engine. 2. Remove the oil gauge dip stick [→]; wipe it clean and reinstall. 3. Take the oil level gauge out again, and check the oil level; the proper level should be within the parameter shown [↙]. Add oil if necessary. Inspect the engine air filter element as per **Key #5** in this table (**Table 5A**). Replace if necessary.
3	**Check the coolant recovery tank level** **⚠ WARNING** **DO NOT overfill recovery tank.** **DO NOT remove the radiator cap while coolant is hot. When cool to the touch, rotate cap to the first stop to allow excess pressure to escape. Then remove cap completely.** **If overheating should occur, escaping pressurized steam may be present from the radiator or recovery tank. Severe burns can result in contact with this steam.**	■	■							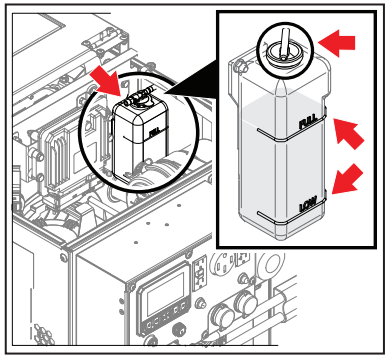 **REFERENCE:** • Coolant Recovery Tank [↘] • Recovery Tank Fill Port / Cap [←] • Recovery Tank FULL Indication [↖] • Recovery Tank LOW Indication[↙] **PROCEDURE:** Add clean, fresh water if low. Recovery tank is marked with a FULL and LOW level indicator; proper level is between these lines. **DO NOT overfill** recovery tank. For complete coolant change, also refer to the Engine Operation Manual.

Continued on next page

TABLE 3B: ROUTINE MAINTENANCE REPLACEMENT KITS [I]

KEY NO.	DESCRIPTION	QTY
KIT1154-01	Kit, Engine Service - filters [air pre-cleaner, air, oil, fuel], and motor oil [II]	1
KIT1505	Kit, Compressor First 50 Hour Service - Vanguard™ oil [1 gal], oil filter [II]	1
KIT1501	Kit, Compressor 500 Hour Service - air filter, Vanguard™ high pressure oil [1 gal], oil & separator elements [II]	1

[I] If working in dusty or dirty conditions, reduce the recommended time intervals between servicing by half for engine and compressor oil change, and engine and compressor filter servicing.

[II] Refer to **Section 5, Table 5A** for kit content item identification, and additional replacement parts items.

PLEASE NOTE: WHEN ORDERING PARTS, INDICATE MACHINE SERIAL NUMBER.

IMPORTANT

Operator should also consult the Maintenance Intervals in the Engine Operation manual.

TABLE 3A: MACHINE MAINTENANCE SCHEDULE INTERVALS

⚠WARNING

Before performing maintenance: Shut down machine, relieve all system pressure and lock out all power, as per the Safety Section of this manual.

NOTE THAT THE SYSTEM CAN BE STARTED REMOTELY: Always clearly tag the start-up instrumentation against accidental system start-ups during maintenance.

INTERVALS - Refer to **IMPORTANT** message under **Table 3B**

KEY	TASK DESCRIPTION	BREAK-IN PERIOD First 50 Hours	DAILY	Every 50 Hours	Every 200 Hours	Every 400 Hours	Every 500 Hours or annually	Every 1000 Hours	Every Two (2) Years	ACTION TO TAKE / REFERENCE
4	Check engine oil level		■							
5	Inspect / clean engine air filter element		■							

TABLE 3B: ROUTINE MAINTENANCE REPLACEMENT KITS [I]

KEY NO.	DESCRIPTION	QTY
KIT1154-01	Kit, Engine Service - filters [air pre-cleaner, air, oil, fuel], and motor oil [II]	1
KIT1505	Kit, Compressor First 50 Hour Service - Vanguard™ oil [1 gal], oil filter [II]	1
KIT1501	Kit, Compressor 500 Hour Service - air filter, Vanguard™ high pressure oil [1 gal], oil & separator elements [II]	1

[I] If working in dusty or dirty conditions, reduce the recommended time intervals between servicing by half for engine and compressor oil change, and engine and compressor filter servicing.

[II] Refer to **Section 5, Table 5A** for kit content item identification, and additional replacement parts items.

PLEASE NOTE: WHEN ORDERING PARTS, INDICATE MACHINE SERIAL NUMBER.

IMPORTANT

Operator should also consult the Maintenance Intervals in the Engine Operation manual.

ACTION TO TAKE / REFERENCE

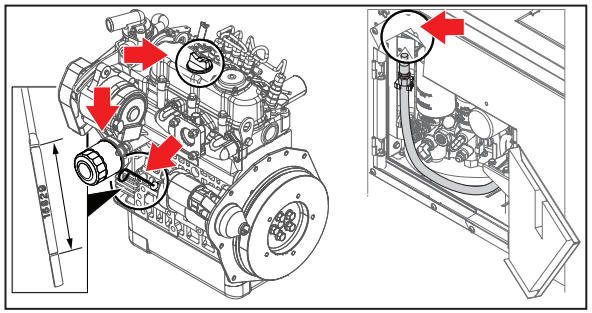

REFERENCE:

- Engine Oil Fill Port Cap [➡]
- Engine Oil Filter Element [⬇]
- Engine Dip Stick / Oil Level Gauge [↗]
- Engine Oil Drain Tube [⬅]

PROCEDURE:

Consult the Engine Operation Manual for oil change instructions. For part replacement order full engine service kit **no. KIT1154-01**, or by individual part (refer to **Table 3A** for individual kit part breakdown).

Oil Level Check Procedure:

1. Check the engine oil level before starting or more than 5 minutes after stopping the engine.
2. Remove the oil gauge, wipe it clean and reinstall.
3. Take the oil level gauge out again, and check the oil level; the proper level should be within the parameter shown. Add oil if necessary.

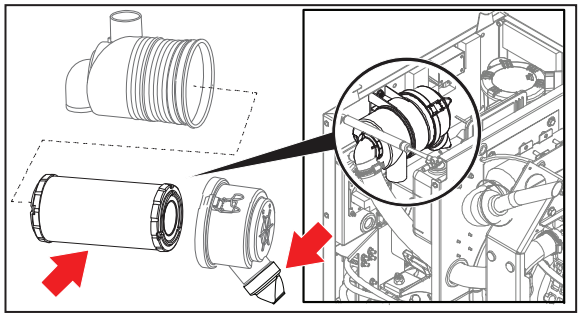

REFERENCE:

- Engine Air Filter Element [↗]
- Engine Air Filter Evacuator Dust Valve [↗]

PROCEDURE:

To check/clear the engine evacuator valve, refer to **key no. 16** in this Table.

...Continued next page...

TABLE 3A: MACHINE MAINTENANCE SCHEDULE INTERVALS

⚠WARNING

Before performing maintenance: Shut down machine, relieve all system pressure and lock out all power, as per the Safety Section of this manual.

NOTE THAT THE SYSTEM CAN BE STARTED REMOTELY: Always clearly tag the start-up instrumentation against accidental system start-ups during maintenance.

INTERVALS - Refer to **IMPORTANT** message under **Table 3B**

KEY	TASK DESCRIPTION	BREAK-IN PERIOD First 50 Hours	DAILY	Every 50 Hours	Every 200 Hours	Every 400 Hours	Every 500 Hours or annually	Every 1000 Hours	Every Two (2) Years	ACTION TO TAKE / REFERENCE
5	**Inspect / clean engine air filter element**		■							***...continued from previous page...*** **PROCEDURE (CONTINUED):** For full instructions, consult the air cleaner maintenance procedure in the Engine Operation Manual. **IMPORTANT** **Make sure the hooking clip for cover for the element is tight enough. If it is loose, dust and dirt may be sucked, wearing down the cylinder liner and piston ring earlier and thereby resulting in poor power output.**
6	**Check compressor oil level (confirm machine rests on level surface)**		■							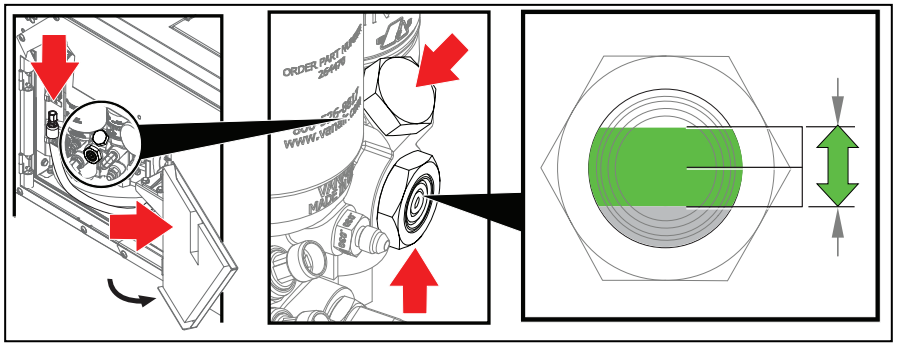 **REFERENCE (TYPICAL):** • Compressor Oil Drain Hose [↓] • Maintenance Access Door Location [→] • Oil Fill Port [↙] • Oil Sight Glass [↑] • Optimal Oil Level Range [↕] [I] [I] Optimal oil level is between 1/4 - 3/4 of sight glass. **DO NOT TOP OFF AT THE FILL PORT / DO NOT OVERFILL** - use the sight glass only to determine proper compressor oil level. ***...Continued next page...***

TABLE 3B: ROUTINE MAINTENANCE REPLACEMENT KITS [I]

KEY NO.	DESCRIPTION	QTY
KIT1154-01	Kit, Engine Service - filters [air pre-cleaner, air, oil, fuel], and motor oil [II]	1
KIT1505	Kit, Compressor First 50 Hour Service - Vanguard™ oil [1 gal], oil filter [II]	1
KIT1501	Kit, Compressor 500 Hour Service - air filter, Vanguard™ high pressure oil [1 gal], oil & separator elements [II]	1

[I] If working in dusty or dirty conditions, reduce the recommended time intervals between servicing by half for engine and compressor oil change, and engine and compressor filter servicing.

[II] Refer to **Section 5, Table 5A** for kit content item identification, and additional replacement parts items.

PLEASE NOTE: WHEN ORDERING PARTS, INDICATE MACHINE SERIAL NUMBER.

IMPORTANT

Operator should also consult the Maintenance Intervals in the Engine Operation manual.

TABLE 3A: MACHINE MAINTENANCE SCHEDULE INTERVALS

⚠WARNING

Before performing maintenance: Shut down machine, relieve all system pressure and lock out all power, as per the Safety Section of this manual.

NOTE THAT THE SYSTEM CAN BE STARTED REMOTELY: Always clearly tag the start-up instrumentation against accidental system start-ups during maintenance.

INTERVALS - Refer to **IMPORTANT** message under **Table 3B**

KEY	TASK DESCRIPTION	BREAK-IN PERIOD First 50 Hours	DAILY	Every 50 Hours	Every 200 Hours	Every 400 Hours	Every 500 Hours or annually	Every 1000 Hours	Every Two (2) Years	ACTION TO TAKE / REFERENCE
6	**Check compressor oil level (confirm machine rests on level surface) (continued)**		■							***...continued from previous page...*** **PROCEDURE (CONTINUED):** Remove fill port cap. Add oil as necessary at the oil fill port, but take caution to fill slowly in order to avoid overfill. Never top off at the fill port tube - use the sight glass oil range shown above [⬅]. **DO NOT** mix different oil types.
7	**Inspect compressor air filter element** **IMPORTANT** **The compressor oil is the key to a long useful life of the air compressor system. Dirt and other foreign matter can be introduced into the compressor system through the air intake. A clean air filter will ensure that the compressor is protected.**		■							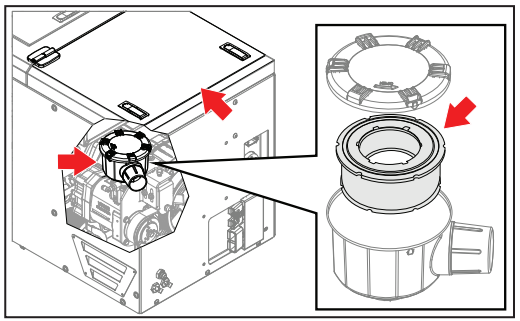 **REFERENCE:** • Access Hood For Air Filter Maintenance [↖]. • Air Filter Housing [➡] • Air Filter Element [↙] **PROCEDURE:** Inspect filter for dust/dirt build up. Carefully clean, but **DO NOT DAMAGE** filter. Replace if necessary: order air filter replacement element assembly **no. 280661-1**. Note that the 500 hour kit **no. KIT1501** also includes an air filter replacement element. Remove the air filter housing cover by twisting counter-clockwise and lifting upward to disengage. Remove the element. Seat the new replacement into the air filter body, and rotate clockwise to set in place. Discard worn air filter assembly within applicable refuse laws.
8	**Visually inspect the tensioner timing marks**		■							**REFERENCE:** Refer to ***Section 3.4.1 Re-tensioning and Replacing the Serpentine Drive Belt***. **PROCEDURE:** Tighten belt if necessary as per instructions in ***Section 3.4.1***.

Continued on next page

TABLE 3B: ROUTINE MAINTENANCE REPLACEMENT KITS [I]

KEY NO.	DESCRIPTION	QTY
KIT1154-01	Kit, Engine Service - filters [air pre-cleaner, air, oil, fuel], and motor oil [II]	1
KIT1505	Kit, Compressor First 50 Hour Service - Vanguard™ oil [1 gal], oil filter [II]	1
KIT1501	Kit, Compressor 500 Hour Service - air filter, Vanguard™ high pressure oil [1 gal], oil & separator elements [II]	1

[I] If working in dusty or dirty conditions, reduce the recommended time intervals between servicing by half for engine and compressor oil change, and engine and compressor filter servicing.

[II] Refer to **Section 5, Table 5A** for kit content item identification, and additional replacement parts items.

PLEASE NOTE: WHEN ORDERING PARTS, INDICATE MACHINE SERIAL NUMBER.

IMPORTANT

Operator should also consult the Maintenance Intervals in the Engine Operation manual.

TABLE 3A: MACHINE MAINTENANCE SCHEDULE INTERVALS

⚠ WARNING

Before performing maintenance: Shut down machine, relieve all system pressure and lock out all power, as per the Safety Section of this manual.

NOTE THAT THE SYSTEM CAN BE STARTED REMOTELY: Always clearly tag the start-up instrumentation against accidental system start-ups during maintenance.

INTERVALS -
Refer to **IMPORTANT** message under **Table 3B**

KEY	TASK DESCRIPTION	BREAK-IN PERIOD First 50 Hours	DAILY	Every 50 Hours	Every 200 Hours	Every 400 Hours	Every 500 Hours or annually	Every 1000 Hours	Every Two (2) Years	ACTION TO TAKE / REFERENCE
9	**Drain condensate from drain if equipped)** **⚠ CAUTION** Contents may be under pressure, use caution when draining moisture from the system.		■							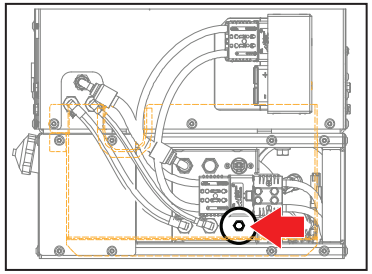 **REFERENCE:** • Condensate Drain Outlet [⬅] **PROCEDURE:** Remove cap (or if valve present, open valve). Let all water drain; replace cap or turn off valve.
10	**System inspection**		■							**PROCEDURE:** Visually review the entire machine being mindful of any evidence of abnormal wear, including pooled oil, frayed or rubbed connection piping, loose fasteners or hardware, leaks, damage, etc.
11	**Inspect cooler/radiator fins**		■							**PROCEDURE:** Visually check for any loose debris or dirt accumulation around cooler/radiator fins. Remove as needed.
12	**Inspect line fittings and electrical connections**		■							**PROCEDURE:** Ensure that all connections and fittings, including tubing and electrical connections, are snugly fastened without being twisted or compromised by extreme bending or contact with sharp corners or surfaces. Zip-tie any loose length of fitting if it appears to have a tendency to shift or cause wear while the machine is in operation.
13	**Check engine air intake hose**		■							**PROCEDURE:** Ensure that the intake hose is properly fastened and free from any compromises, such as tears or holes.

Continued on next page

TABLE 3B: ROUTINE MAINTENANCE REPLACEMENT KITS [I]

KEY NO.	DESCRIPTION	QTY
KIT1154-01	Kit, Engine Service - filters [air pre-cleaner, air, oil, fuel], and motor oil [II]	1
KIT1505	Kit, Compressor First 50 Hour Service - Vanguard™ oil [1 gal], oil filter [II]	1
KIT1501	Kit, Compressor 500 Hour Service - air filter, Vanguard™ high pressure oil [1 gal], oil & separator elements [II]	1

[I] If working in dusty or dirty conditions, reduce the recommended time intervals between servicing by half for engine and compressor oil change, and engine and compressor filter servicing.

[II] Refer to **Section 5, Table 5A** for kit content item identification, and additional replacement parts items.

PLEASE NOTE: WHEN ORDERING PARTS, INDICATE MACHINE SERIAL NUMBER.

IMPORTANT

Operator should also consult the Maintenance Intervals in the Engine Operation manual.

TABLE 3A: MACHINE MAINTENANCE SCHEDULE INTERVALS

⚠WARNING

Before performing maintenance: Shut down machine, relieve all system pressure and lock out all power, as per the Safety Section of this manual.

NOTE THAT THE SYSTEM CAN BE STARTED REMOTELY: Always clearly tag the start-up instrumentation against accidental system start-ups during maintenance.

INTERVALS - Refer to **IMPORTANT** message under **Table 3B**

KEY	TASK DESCRIPTION	BREAK-IN PERIOD First 50 Hours	DAILY	Every 50 Hours	Every 200 Hours	Every 400 Hours	Every 500 Hours or annually	Every 1000 Hours	Every Two (2) Years	ACTION TO TAKE / REFERENCE
14	Visually inspect fuel lines and clamps			■						**PROCEDURE:** Ensure that the fuel lines are properly fastened and free from any compromises or damage. Ensure that all clamps are well-fitted and snug.
15	Engine - change oil and oil filter				■					**PROCEDURE:** Refer to **Key # 2** in this table (**Table 3A**) for procedure on changing the engine oil and oil filter.
16	Clean the air filter dust evacuator cap				■					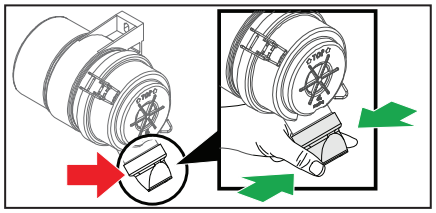 **REFERENCE:** • Engine Air Filter Evacuator Dust Valve [➡] **PROCEDURE:** Refer to the figure at left for dust cap operation illustration. Empty valve by squeezing the cap as shown with the green arrows. Wipe with clean, damp cloth if possible.
17	Engine - replace air filter				■					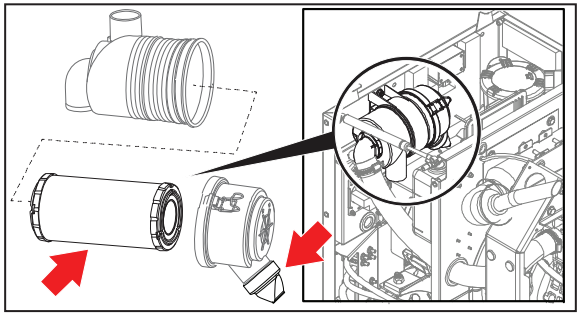 **REFERENCE:** • Engine Air Filter Element [↗] • Engine Air Filter Evacuator Dust Valve [↙] **PROCEDURE:** To check/clear the engine evacuator valve, refer to **key no. 16** in this Table. For full instructions, consult the air cleaner maintenance procedure in the Engine Operation Manual. ***...Continued next page...***

TABLE 3B: ROUTINE MAINTENANCE REPLACEMENT KITS [I]

KEY NO.	DESCRIPTION	QTY
KIT1154-01	Kit, Engine Service - filters [air pre-cleaner, air, oil, fuel], and motor oil [II]	1
KIT1505	Kit, Compressor First 50 Hour Service - Vanguard™ oil [1 gal], oil filter [II]	1
KIT1501	Kit, Compressor 500 Hour Service - air filter, Vanguard™ high pressure oil [1 gal], oil & separator elements [II]	1

[I] If working in dusty or dirty conditions, reduce the recommended time intervals between servicing by half for engine and compressor oil change, and engine and compressor filter servicing.

[II] Refer to **Section 5, Table 5A** for kit content item identification, and additional replacement parts items.

PLEASE NOTE: WHEN ORDERING PARTS, INDICATE MACHINE SERIAL NUMBER.

IMPORTANT

Operator should also consult the Maintenance Intervals in the Engine Operation manual.

TABLE 3A: MACHINE MAINTENANCE SCHEDULE INTERVALS

⚠WARNING

Before performing maintenance: Shut down machine, relieve all system pressure and lock out all power, as per the Safety Section of this manual.

NOTE THAT THE SYSTEM CAN BE STARTED REMOTELY: Always clearly tag the start-up instrumentation against accidental system start-ups during maintenance.

INTERVALS - Refer to **IMPORTANT** message under **Table 3B**

KEY	TASK DESCRIPTION	BREAK-IN PERIOD First 50 Hours	DAILY	Every 50 Hours	Every 200 Hours	Every 400 Hours	Every 500 Hours or annually	Every 1000 Hours	Every Two (2) Years	ACTION TO TAKE / REFERENCE
17	**Engine - replace air filter (continued)**				■					***...continued from previous page...*** **PROCEDURE (CONTINUED):** **IMPORTANT** **Make sure the hooking clip for cover for the element is tight enough. If it is loose, dust and dirt may be sucked, wearing down the cylinder liner and piston ring earlier and thereby resulting in poor power output.**
18	**Engine - Inspect engine alternator belt**				■					**PROCEDURE:** Refer to the Engine Operation Manual for engine alternator belt servicing. Ensure that the belt is free from any damage, fraying, or excessive looseness. To adjust or replace the engine alternator belt, refer to ***Section 3.4.2, Replacing the Engine Fan / Alternator Driver Belt***.
19	**Visually inspect the compressor drive belt**				■					**PROCEDURE:** Ensure that the compressor drive belt is free from excessive wear, tear and/or fraying. Re-tension the belt if necessary. For drive belt maintenance, refer to ***Section 3.4.1, Re-tensioning and Replacing the Serpentine Drive Belt***. (**Section 3.4.1.3** for 40 CFM; **3.4.1.4 60 CFM**).
20	**Check battery cable and connections**				■					**PROCEDURE:** Inspect cables for any wear or stress. Clean and tighten as necessary. Replace any worn cables.
21	**Inspect machine mounting bolts**				■					**PROCEDURE:** Ensure that all mounting bolts are secure. Tighten if necessary.
22	**Blow out generator with air nozzle**				■					**PROCEDURE:** Use an independent air source to blow out any dust/dirt accumulation.

Continued on next page

TABLE 3B: ROUTINE MAINTENANCE REPLACEMENT KITS [I]

KEY NO.	DESCRIPTION	QTY
KIT1154-01	Kit, Engine Service - filters [air pre-cleaner, air, oil, fuel], and motor oil [II]	1
KIT1505	Kit, Compressor First 50 Hour Service - Vanguard™ oil [1 gal], oil filter [II]	1
KIT1501	Kit, Compressor 500 Hour Service - air filter, Vanguard™ high pressure oil [1 gal], oil & separator elements [II]	1

[I] If working in dusty or dirty conditions, reduce the recommended time intervals between servicing by half for engine and compressor oil change, and engine and compressor filter servicing.

[II] Refer to **Section 5, Table 5A** for kit content item identification, and additional replacement parts items.

PLEASE NOTE: WHEN ORDERING PARTS, INDICATE MACHINE SERIAL NUMBER.

IMPORTANT

Operator should also consult the Maintenance Intervals in the Engine Operation manual.

TABLE 3A: MACHINE MAINTENANCE SCHEDULE INTERVALS

⚠WARNING

Before performing maintenance: Shut down machine, relieve all system pressure and lock out all power, as per the Safety Section of this manual.

NOTE THAT THE SYSTEM CAN BE STARTED REMOTELY: Always clearly tag the start-up instrumentation against accidental system start-ups during maintenance.

INTERVALS - Refer to **IMPORTANT** message under **Table 3B**

KEY	TASK DESCRIPTION	BREAK-IN PERIOD First 50 Hours	DAILY	Every 50 Hours	Every 200 Hours	Every 400 Hours	Every 500 Hours or annually	Every 1000 Hours	Every Two (2) Years	ACTION TO TAKE / REFERENCE
23	Inspect radiator hoses and clamps				■					**PROCEDURE:** Ensure that the radiator hoses are properly fastened and free from any compromises, such as tears, cracks or holes. If necessary place any hoses. Make sure all clamps are securely fastened.
24	Inspect weld leads and battery charge leads				■					**PROCEDURE:** Inspect all leads for clean and proper connections; remove any residue build-up. Replace if necessary.
25	Inspect welding electrode and ground clamp				■					**PROCEDURE:** Inspect electrode and ground clamp for clean and proper connections; remove any residue build-up. Replace if necessary.
26	Replace engine fuel filter					■				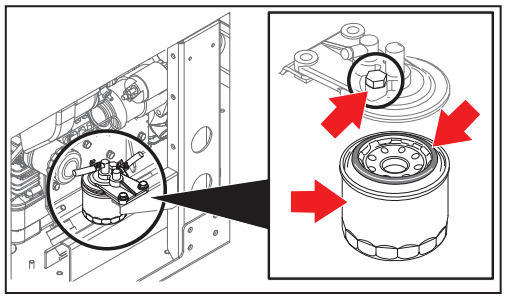 **REFERENCE:** • Fuel Line Bleed Nut [⬈] • Engine Fuel Filter Element [➡] • Engine Fuel Filter Element Seal [⬋] **PROCEDURE:** Refer to ***Section 3.4.4, Venting the Fuel Line*** for engine fuel filter replacement, and also fuel line venting, procedures.

Continued on next page

TABLE 3B: ROUTINE MAINTENANCE REPLACEMENT KITS [I]

KEY NO.	DESCRIPTION	QTY
KIT1154-01	Kit, Engine Service - filters [air pre-cleaner, air, oil, fuel], and motor oil [II]	1
KIT1505	Kit, Compressor First 50 Hour Service - Vanguard™ oil [1 gal], oil filter [II]	1
KIT1501	Kit, Compressor 500 Hour Service - air filter, Vanguard™ high pressure oil [1 gal], oil & separator elements [II]	1

[I] If working in dusty or dirty conditions, reduce the recommended time intervals between servicing by half for engine and compressor oil change, and engine and compressor filter servicing.

[II] Refer to **Section 5, Table 5A** for kit content item identification, and additional replacement parts items.

PLEASE NOTE: WHEN ORDERING PARTS, INDICATE MACHINE SERIAL NUMBER.

IMPORTANT

Operator should also consult the Maintenance Intervals in the Engine Operation manual.

TABLE 3A: MACHINE MAINTENANCE SCHEDULE INTERVALS

⚠WARNING

Before performing maintenance: Shut down machine, relieve all system pressure and lock out all power, as per the Safety Section of this manual.

NOTE THAT THE SYSTEM CAN BE STARTED REMOTELY: Always clearly tag the start-up instrumentation against accidental system start-ups during maintenance.

INTERVALS - Refer to **IMPORTANT** message under **Table 3B**

KEY	TASK DESCRIPTION	BREAK-IN PERIOD First 50 Hours	DAILY	Every 50 Hours	Every 200 Hours	Every 400 Hours	Every 500 Hours or annually	Every 1000 Hours	Every Two (2) Years	ACTION TO TAKE / REFERENCE
27	**Compressor - complete a full service kit replacement:** (change/replace: high pressure oil, filter, air filter element and separator element)						■			

TABLE 3B: ROUTINE MAINTENANCE REPLACEMENT KITS [I]

KEY NO.	DESCRIPTION	QTY
KIT1154-01	Kit, Engine Service - filters [air pre-cleaner, air, oil, fuel], and motor oil [II]	1
KIT1505	Kit, Compressor First 50 Hour Service - Vanguard™ oil [1 gal], oil filter [II]	1
KIT1501	Kit, Compressor 500 Hour Service - air filter, Vanguard™ high pressure oil [1 gal], oil & separator elements [II]	1

[I] If working in dusty or dirty conditions, reduce the recommended time intervals between servicing by half for engine and compressor oil change, and engine and compressor filter servicing.

[II] Refer to **Section 5, Table 5A** for kit content item identification, and additional replacement parts items.

PLEASE NOTE: WHEN ORDERING PARTS, INDICATE MACHINE SERIAL NUMBER.

IMPORTANT

Operator should also consult the Maintenance Intervals in the Engine Operation manual.

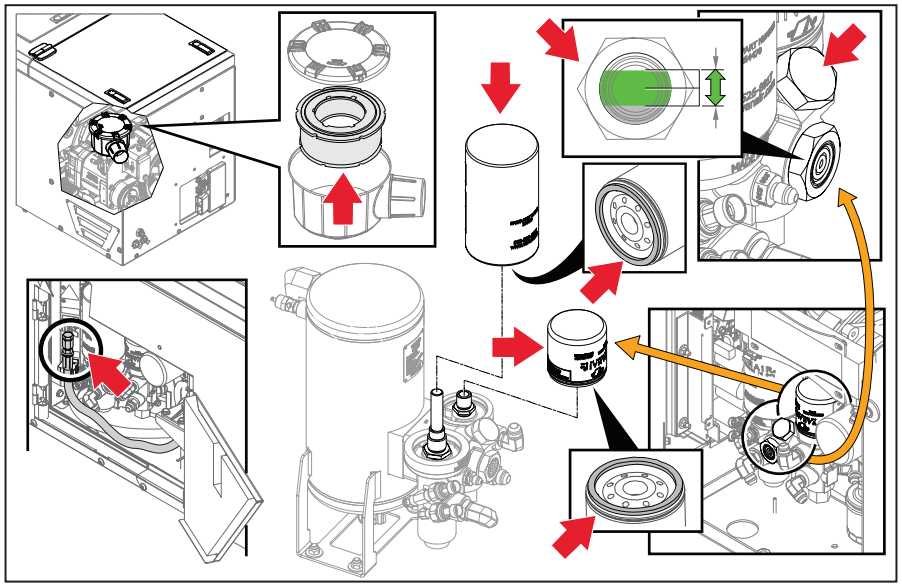

REFERENCE (TYPICAL):

• Separator Element [↓]	• Oil Fill Port / Cap [↙]
• Oil filter and Separator Seals [↗]	• Optimal Oil Level Range [↕] [I]
• Oil Level Sight Glass [↘]	• Oil Filter Element [→]
• Oil Drain Hose (Location) [↖]	• Air Filter Element [↑] [II]

[I] Optimal oil level is between 1/4 - 3/4 of sight glass. **DO NOT TOP OFF AT THE FILL PORT / DO NOT OVERFILL** - use the sight glass only to determine proper compressor oil level.

[II] If performing an air filter change during full service maintenance refer to **Key #7** of this Table for visual identification and procedure for compressor air filter maintenance.

...Continued next page...

TABLE 3A: MACHINE MAINTENANCE SCHEDULE INTERVALS

⚠WARNING

Before performing maintenance: Shut down machine, relieve all system pressure and lock out all power, as per the Safety Section of this manual.

NOTE THAT THE SYSTEM CAN BE STARTED REMOTELY: Always clearly tag the start-up instrumentation against accidental system start-ups during maintenance.

INTERVALS - Refer to **IMPORTANT** message under **Table 3B**

KEY	TASK DESCRIPTION	BREAK-IN PERIOD First 50 Hours	DAILY	Every 50 Hours	Every 200 Hours	Every 400 Hours	Every 500 Hours or annually	Every 1000 Hours	Every Two (2) Years	ACTION TO TAKE / REFERENCE
27	**Compressor - complete a full service kit replacement: (change/replace: high pressure oil, filter, air filter element and separator element) (continued)**						■			***..continued from previous page...*** **PROCEDURE:** Order separator/coalescer 500 hour service kit **no. KIT1501**. **NOTE** **Coat both (separator and compressor) oil filter replacement element sealing rings [↖], with a film of compressor oil before securing in place, to assure a complete seal.** For a full service application for the compressor unit the oil filter, air filter, separator element and high pressure oil are replaced. It is recommended that all replacement components in the service kit are used, regardless of the condition of the parts to be replaced. To engage a full service application, drain the oil and remove the oil filter as outlined in **Key #4** of this table. Remove the separator element with a strap wrench. Coat the new replacement element from the kit with oil as per the NOTE above. Coat surface of sealing ring on new replacement element with compressor oil before mounting into place; hand-tighten, and then with a filter wrench, turn filter body an additional 1/2 to 3/4 turn to secure. Refill compressor with new oil as per **Key #4**; compressor oil fill is approximately four (4) quarts. Discard used oil and worn filters under guidance of acceptable refuge/recycle laws.
28	**Engine - replace engine alternator belt and air filter element**						■			**PROCEDURE:** For instructions on replacing the engine alternator belt order belt replacement **no. 28670**, and refer to ***Section 5.4.2, Replacing the Engine Fan/Alternator Driver Belt***. +++++ For instructions on replacing the engine air filter order engine air filter replacement element **no. EN38480** (note that an engine air filter replacement is also available within full engine service kit **no. KIT1154-01**). Reference **Key #5** in this Table (**Table 5A**), and consult the engine operation manual.

Continued on next page

TABLE 3B: ROUTINE MAINTENANCE REPLACEMENT KITS [I]

KEY NO.	DESCRIPTION	QTY
KIT1154-01	Kit, Engine Service - filters [air pre-cleaner, air, oil, fuel], and motor oil [II]	1
KIT1505	Kit, Compressor First 50 Hour Service - Vanguard™ oil [1 gal], oil filter [II]	1
KIT1501	Kit, Compressor 500 Hour Service - air filter, Vanguard™ high pressure oil [1 gal], oil & separator elements [II]	1

[I] If working in dusty or dirty conditions, reduce the recommended time intervals between servicing by half for engine and compressor oil change, and engine and compressor filter servicing.

[II] Refer to **Section 5, Table 5A** for kit content item identification, and additional replacement parts items.

PLEASE NOTE: WHEN ORDERING PARTS, INDICATE MACHINE SERIAL NUMBER.

IMPORTANT

Operator should also consult the Maintenance Intervals in the Engine Operation manual.

TABLE 3A: MACHINE MAINTENANCE SCHEDULE INTERVALS

⚠ WARNING

Before performing maintenance: Shut down machine, relieve all system pressure and lock out all power, as per the Safety Section of this manual.

NOTE THAT THE SYSTEM CAN BE STARTED REMOTELY: Always clearly tag the start-up instrumentation against accidental system start-ups during maintenance.

INTERVALS - Refer to **IMPORTANT** message under **Table 3B**

KEY	TASK DESCRIPTION	BREAK-IN PERIOD First 50 Hours	DAILY	Every 50 Hours	Every 200 Hours	Every 400 Hours	Every 500 Hours or annually	Every 1000 Hours	Every Two (2) Years	ACTION TO TAKE / REFERENCE
29	Replace generator welder brushes							■		**PROCEDURE:** For instructions on replacement of generator welder brushes consult the Vanair® Service Department.
30	Replace the serpentine drive belt							■		**PROCEDURE:** Over time the serpentine drive belt may become worn out and lose viability due to age, weather conditions, etc. For this reason Vanair® recommends changing the belt every 1000 hours. For belt replacement procedure, refer to ***Section 3.4.1 Re-tensioning and Replacing the Serpentine Drive Belt***.
31	Flush cooling system and change coolant								■	**PROCEDURE:** Refer to ***Section 3.4.5, Engine Cooling System Maintenance*** for full radiator maintenance procedure.

TABLE 3B: ROUTINE MAINTENANCE REPLACEMENT KITS [I]

KEY NO.	DESCRIPTION	QTY
KIT1154-01	Kit, Engine Service - filters [air pre-cleaner, air, oil, fuel], and motor oil [II]	1
KIT1505	Kit, Compressor First 50 Hour Service - Vanguard™ oil [1 gal], oil filter [II]	1
KIT1501	Kit, Compressor 500 Hour Service - air filter, Vanguard™ high pressure oil [1 gal], oil & separator elements [II]	1

[I] If working in dusty or dirty conditions, reduce the recommended time intervals between servicing by half for engine and compressor oil change, and engine and compressor filter servicing.

[II] Refer to **Section 5, Table 5A** for kit content item identification, and additional replacement parts items.

PLEASE NOTE: WHEN ORDERING PARTS, INDICATE MACHINE SERIAL NUMBER.

IMPORTANT

Operator should also consult the Maintenance Intervals in the Engine Operation manual.

...Continued from page 3 - 2

3.4 PARTS REPLACEMENT AND ADJUSTMENT PROCEDURES

⚠ WARNING

Follow all applicable safety recommendations as outlined in Section 1: Safety of this manual.

⚠ WARNING

Before performing maintenance:

Shut down machine, relieve all system pressure and lock out all power, as per the Safety Section of this manual. If machine is hot, allow package to cool before removing any panel.

NOTE THAT THE SYSTEM CAN BE STARTED REMOTELY:

Always clearly tag the start-up instrumentation against accidental system start-ups during maintenance.

⚠ WARNING

DO NOT remove the radiator cap while coolant is hot. When cool to the touch, rotate cap to the first stop to allow excess pressure to escape. Then remove cap completely.

If overheating should occur, escaping pressurized steam may be present from the radiator or recovery tank. Severe burns can result in contact with this steam.

⚠ CAUTION

Always wear personal protective equipment such as gloves, safety shoes or boots, eye, and hearing protection as required for the task at hand.

⚠ CAUTION

Compressors and engines generate heat and create hot surfaces. Use caution when operating or servicing equipment. Some surfaces and components may be hot.

IMPORTANT

DO NOT stop the engine suddenly! Stop the engine after approximately five (5) minutes of unloaded idling.

NOTE

Refer to the Engine Operation Manual for detailed maintenance and replacement procedures for the engine.

NOTE

It may be necessary to change the compressor oil and oil filter at earlier intervals if the compressor oil has water contamination or if the compressor system is operated in a dirty environment.

NOTE

Inspect and replace damaged components before operation with Genuine Vanair® Replacement Parts.

DO NOT mix different compressor fluid types. Use only Vanguard™ Premium Synthetic Compressor Oil.

Substituting non-Vanguard™ Oil or non-genuine Vanair® filter components will void the warranty.

3.4.1 RE-TENSIONING AND REPLACING THE SERPENTINE DRIVE BELT

Refer to ***Figures 3-2*** and ***3-3*** to identify components of the compressor drive system. The compressor is driven by the engine using a serpentine belt. The belt will generally not need replacement during the service life of the component drive system. However, over time it may become loose and need to be tightened, or worn out due to use, weather conditions, etc. For this reason Vanair® recommends changing the belt every 1000 hours. The proper tension can be determined by using a tension tester to measure the deflection from a given force.

However, should the belt prove to be too loose, it will need to be replaced.

3.4.1.1 BELT TENSION CHECK

If the belt is worn enough that it cannot retain traction or tension, it should be replaced.

3.4.1.2 ADJUSTING THE BELT TENSION

Drive belt tension should be maintained to avoid premature belt wear, poor performance due to belt slippage, or damage to engine and/or

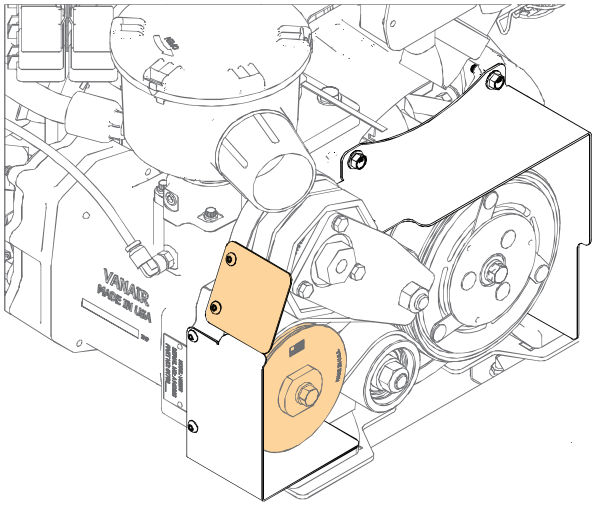

40 CFM CONFIGURATION

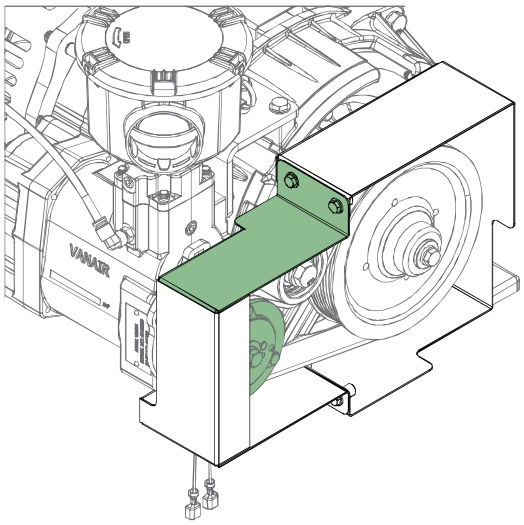

60 CFM CONFIGURATION

Observable features of the drive system to identify and distinguish 40 CFM and 60 CFM configurations.

Figure 3-2: Machine Type Configuration Identifying Characteristics

compressor. The Air N Arc® 330 Diesel has an idler pulley assembly with a tensioning device to set the proper belt tension. Belt tension is determined by applying a torque wrench, as per the instructions in this Section, to achieve the specifications given in **TABLE 3C**.

TABLE 3C: DRIVE BELT TORQUES	
40 CFM:	45 ft-lbs
60 CFM:	35 ft-lbs //40 ft-lbs (with new belt replacement)

Refer to ***Figures 3-3*** and ***3-4***. To replace the drive belt first order replacement belt **no. 287314 (40 CFM)**, or **no. 283622 (60 CFM)** . Follow the procedure below to replace the fan/alternator driver belt.

1. To adjust belt tension place wrench at the [**W1**] position shown in ***Figure 3-4***, and loosen the locking bolt.
2. Place a second wrench [**W2**] on the adjustment/set nut and rotate the tensioner assembly to the proper torque specification given in **TABLE 3C**, and hold the position with the wrench.
3. Tighten the locking bolt at the [**W1**] position to secure the belt in its tightened position.

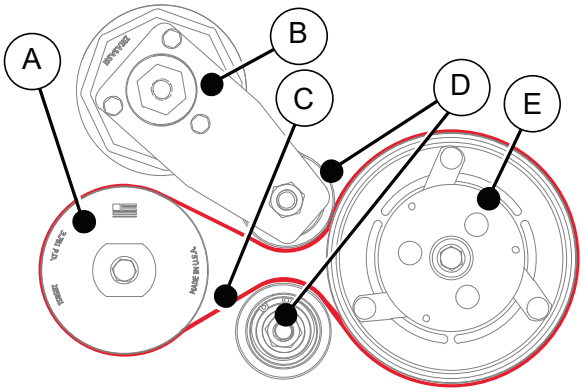

KEY	DESCRIPTION	KEY	DESCRIPTION
A	COMPRESSOR DRIVE SHEAVE	D	IDLERS
B	BELT TENSIONER ASSEMBLY	E	COMPRESSOR DRIVE CLUTCH
C	DRIVE BELT		
NOTE: 40 CFM configuration shown.			

Figure 3-3: Compressor Drive System Assembly - 40 CFM Model

3.4.1.3 REPLACING THE DRIVE BELT - 40 CFM MODELS

1. If not already loosened, ensure that the tensioning assembly is in the “loosened tensioner position” (as shown in ***Figure 3-4***), by placing a wrench on the [**W1**] position, and

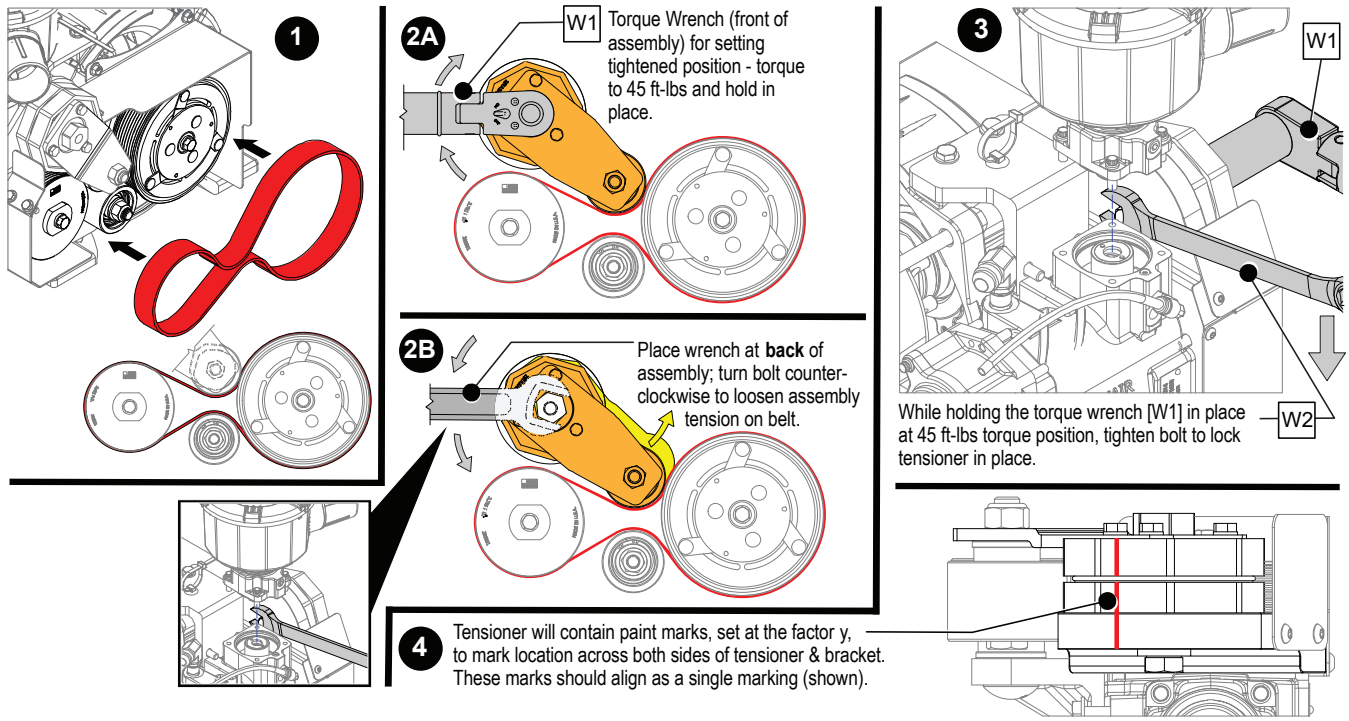

STEP	DESCRIPTION
1	With tensioner assembly in the 'loosened' position, place the belt around the driver shivs and pulleys as shown.
2A	SETTING BELT TENSION: Fit torque wrench to the tension assembly's front bolt (as shown), and torque it to 45 ft-lbs; hold wrench at that position, and go to **Step 3** below.
2B	RELIEVING BELT TENSION: To remove belt (or lessen tension) fit a wrench to the tension assembly's front bolt (as shown), and adjust counter-clockwise to loosen the tension assembly and remove belt, if needed.
3	With wrench held in position from Key #2, tighten bolt to lock tensioner into position.
4	CHECK: The factory set line should align, or be very close to alignment. However: **do not** rely on alignment of line, but rather the proper torque.

Figure 3-4: Compressor Drive System Assembly - 40 CFM Model

loosen the locking bold.

2. Place a second wrench [**W2**] on the adjustment/set nut and move the tensioner assembly to the loosened position.
3. Remove the worn belt.
4. Place and route the replacement belt as shown in **STEP #1** in ***Figure 3-4***.
5. Place a wrench [**W2**] on the adjustment/set nut and adjust to 45 ft-lbs, then *remain holding* that position in place.
6. With a wrench placed at the [**W1**] position and the position of the tensioner still held from Key #5 (above), tighten the locking bolt to secure the tightened position.
7. Discard the replaced belt under applicable recycle laws.

3.4.1.4 REPLACING THE DRIVE BELT - 60 CFM MODELS

Refer to ***Figure 3-5*** and the instructions below.

1. Loosen, but do not remove the three 5/16-18 flange screws [**B**] (red arrows).
2. With a properly-fitted (0.4” square) wrench placed in the square adjustment hole (gree arrow), pivot the tensioner bracket [**A**] counter-clockwise (”LOOSEN” position) to

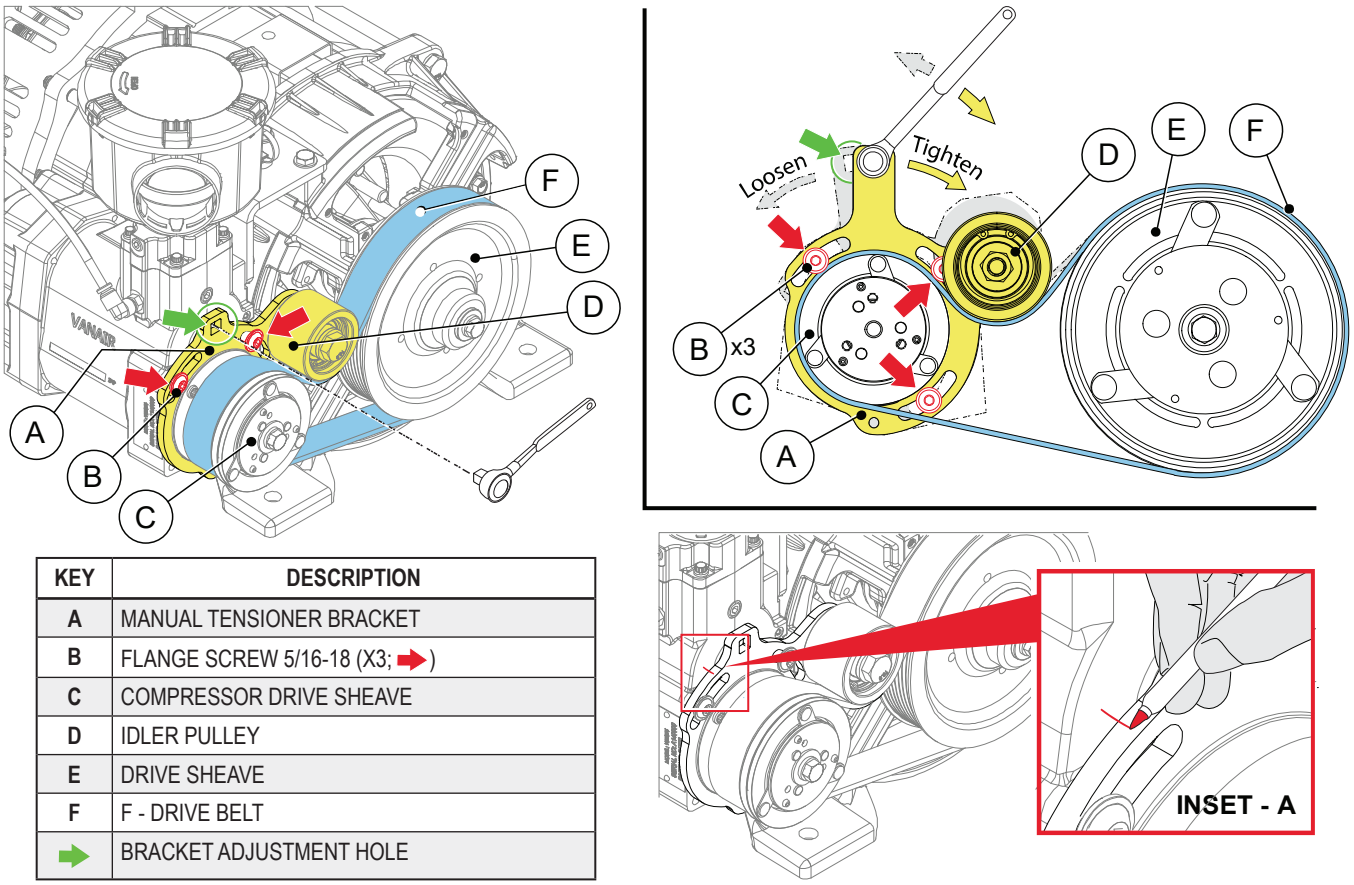

KEY	DESCRIPTION
A	MANUAL TENSIONER BRACKET
B	FLANGE SCREW 5/16-18 (X3; ➡)
C	COMPRESSOR DRIVE SHEAVE
D	IDLER PULLEY
E	DRIVE SHEAVE
F	F - DRIVE BELT
➡	BRACKET ADJUSTMENT HOLE

Figure 3-5: Compressor Drive System Assembly - 60 CFM Model

allow the idler [**D**] to move. This will cause the belt to slacken.

3. When the idler pulley has been moved enough to allow the belt to be removed, disegage and remove the worn belt.
4. Track the new belt as shown, around the outside tracking of the compressor unit and drive sheaves, but under the idler pulley.
5. Using a torque wrench, pivot the tensioner plate clockwise (“TIGHTEN” position), until the torque is at 40 ft-lbs* for the new belt - hold the plate in position, and with a marking tool such as a medium marker pen, draw a line on the tensioner bracket that extends to the compressor unit as shown in **INSET - A**.
6. Swap the torque wrench with the properly-fitted wrench used in **STEP #2**, and apply it to the adjustment hole.
7. Pivot the tensioner bracket clockwise (”TIGHTEN” position) until the mark made in **STEP #5** re-aligns.
8. While still holding the tensioner bracket in place, tighten the three flange screws, triangulating the tightening process to apply even tightening evenly.

* Note the torque specifications for particular belt-tightening conditions in **Table 3C**.

3.4.2 REPLACING THE ENGINE FAN/ ALTERNATOR DRIVER BELT

Refer to ***Figure 3-6***. To replace the engine fan/ alternator driver belt first order replacement belt **no. 286701**. Follow the procedure below to replace the fan/alternator driver belt.

KEY	DESCRIPTION
A	FAN/ALTERNATOR BELT
B	FAN SHEAVE
C	ENGINE "A GROOVE" SHEAVE
D	ALTERNATOR (AND BRACKET ASSEMBLY)
E	ALTERNATOR ADJUSTMENT BOLT
F	ALTERNATOR ANCHOR BOLT

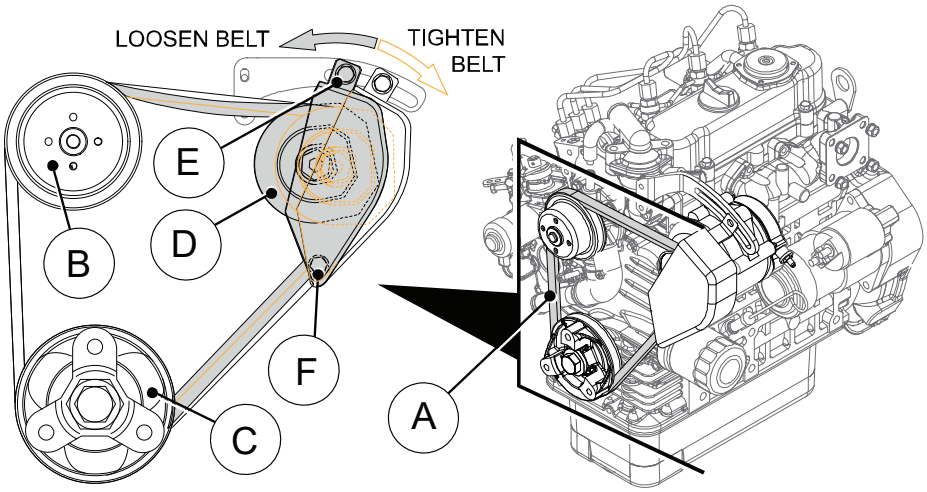

Figure 3-6 : Engine Fan/Alternator Belt Maintenance

1. Loosen but do not remove the alternator adjustment bolt [**E**], and the alternator assembly anchor bolt [**F**], mounting the alternator assembly [**D**] in position. Loosen bolts only enough to allow the alternator assembly to pivot along the positioning bracket grooves while still remaining in position.
2. With a lever placed between the alternator and the engine block, move the alternator assembly in the LOOSEN direction indication to free the belt.
3. Remove the worn belt.
4. Track the replacement belt over the engine "A" groove inner track, fan sheave and alternator drive.
5. To reset the proper tensioned belt position use a lever placed between the alternator and the engine block to move the alternator assembly in the TIGHTENING direction indicated, checking belt deflection (from the NOTE in **Section 3.4.2.1**) as the belt position tightens until the belt deflection is satisfactory.
6. Secure the adjustment and anchor bolts by applying a torque of 51 in-lbs.

3.4.2.1 BELT TENSION CHECK

If the belt is worn enough that it cannot retain traction or tension, it should be replaced.

NOTE

Proper fan belt tension:

A deflection of between 7 to 9 mm (0.28 to 0.35 in.) when the belt is pressed in the middle of the span.

1. Apply moderate thumb pressure to belt between the pulleys.
2. Consult the **NOTE** above: If tension is incorrect, loosen the alternator mounting bolts and, using a lever placed between the alternator and the engine block, pull the alternator out until the deflection of the belt falls within acceptable limits.

3.4.3 SERVICING THE SYSTEM FUSES AND CIRCUIT BREAKERS

⚠ DANGER

Fuses will need to be replaced if they are blown. When changing any fuse, or dealing directly with any function of the electrical system maintenance, always be aware of the safety warnings given in *Section 1, Safety*.

⚠ WARNING

Before performing maintenance:

Shut down machine, relieve all system pressure and lock out all power, as per the Safety Section of this manual.

Continued...

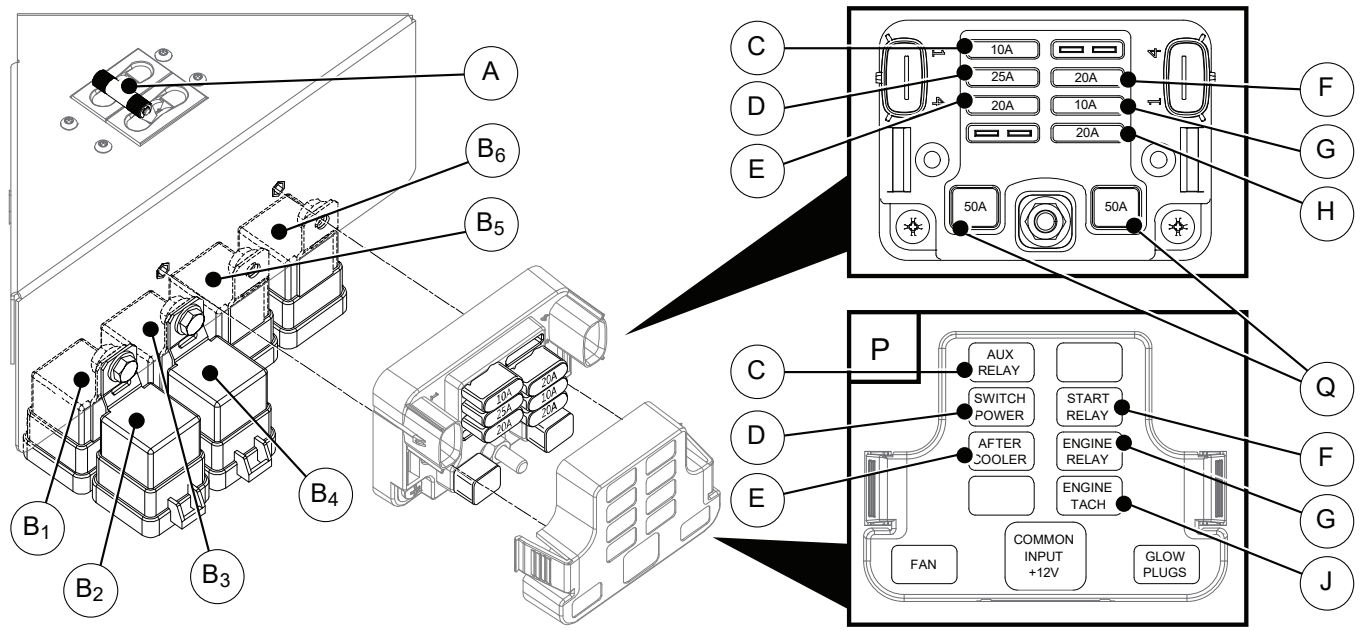

KEY	DESCRIPTION	KEY	DESCRIPTION
A	CIRCUIT BREAKER, 240V/50A MAG #10-32 STUDS	F	START RELAY: 20A FUSE
B_1 - B_6	RELAY, NO/NC WEATHERPROOF WITH RESISTOR [I]	G	ENGINE RELAY: 10A FUSE
C	AUXILIARY RELAY: 10A FUSE	H	ENGINE TACH: 20A FUSE
D	SWITCH POWER: 25A FUSE	J	FUSE BLOCK PANEL
E	AFTER COOLER: 20A FUSE		

[I] NO/NC relays will be labeled with one of the following labels: START RELAY, ENGINE ACTIVE RELAY, GLOW RELAY, AFTERCOOLER RELAY, AUXILIARY RELAY and SWITCHED POWER RELAY. If replacing a faulty relay, label the replacement with the proper component type listed on the replaced relay's label.

Figure 3-7: Fuses and Relays

⚠ WARNING (continued)

If machine is hot, allow package to cool before removing any panel. Always clearly tag the start-up instrumentation against accidental system start-ups during maintenance.

NOTE

There are also two (2) resettable 20A circuit breakers located on the instrument panel.

Consult ***Figure 3-7*** gives the locations of the power system breakers and fuses.

3.4.4 VENTING THE FUEL LINE

NOTE

Perform this function when needed, to purge air from the fuel line.

Air may be introduced into the engine fuel system if the machine runs out of fuel, or after a filter replacement. If air is present in the fuel line it may interfere with required fuel system circulation.

This procedure should be performed before initial start up, and also after every fuel filter element replacement. To remove any air pockets from the fuel line, follow the steps given below.

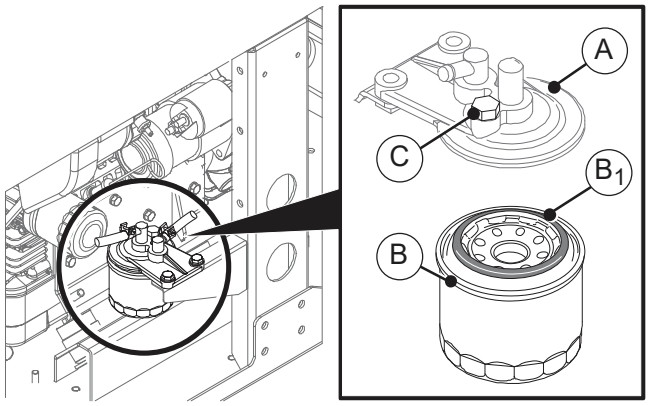

KEY	DESCRIPTION
A	ENGINE FUEL FILTER MOUNT
B	FUEL FILTER ELEMENT
B_1	FILTER ELEMENT SEAL
C	BLEED SCREW

Figure 3-8: Engine Fuel Filter

Refer to ***Figure 3-8***.

1. Fill the fuel tank to the fullest extent.

NOTE

If changing the fuel filter, fill the actual element with fuel before screwing it to the head on the engine.

2. Loosen adjustment bleed screw [**C**] to confirm removal of any remaining system air pockets. Tighten screw once all air is relieved.

3.4.5 ENGINE COOLING SYSTEM MAINTENANCE

Order anti-freeze coolant (50/50 mix, ethylene glycol) replacement **no. 844400-001**. Coolant comes in a gallon container: order two (2) gallons (cooler capacity is 1.2 gallons). Radiator system flush can be obtained from a local source such as an auto-supply store, hardware store, etc.

IMPORTANT

Vanair® Service Department recommends using distilled water for radiator flushing and coolant dilution processes.

⚠ WARNING

DO NOT remove the radiator cap while coolant is hot. When cool to the touch, rotate cap to the first stop to allow excess pressure to escape. Then remove cap completely.

If overheating should occur, escaping pressurized steam may be present from the radiator or recovery tank. Severe burns can result in contact with this steam.

⚠ WARNING

Conform to safety measures given in *Section 1, Safety*, when performing a system flush and coolant replacement: Wear protective eye wear and gloves.

⚠ WARNING

Coolant antifreeze is poisonous. Handle with regard to the safety instructions given on the coolant container. Dispose of the replaced coolant per all safety regards given on the coolant container.

DRAINING (refer to *Figure 3-9*)

1. With the machine cooled, carefully crack the radiator cap to relieve any pressure build up (refer to **WARNINGS** above concerning safety).
2. Place a container capable of holding 1.2 gallons or more at the coolant drain outlet ([**C**] in ***Figure 3-9***) . Remove the port plug and allow all the coolant to drain. Re-plug after the all the coolant has been drained.

FLUSHING

1. At the radiator fill port add a pre-mixed flush solution (50/50 system flush and distilled water) until the unit is mostly full.
2. Start the engine and allow it to heat up for five minutes; turn the engine off and allow the system to cool.
3. Repeat the unit drain process. Take notice of the drained flush solution: if it is extremely dirty, repeat the step above. This can be repeated until the solution is relatively free of the dirty color indication of the drained solution. Always allow a period of cooling off before refilling with flush solution.

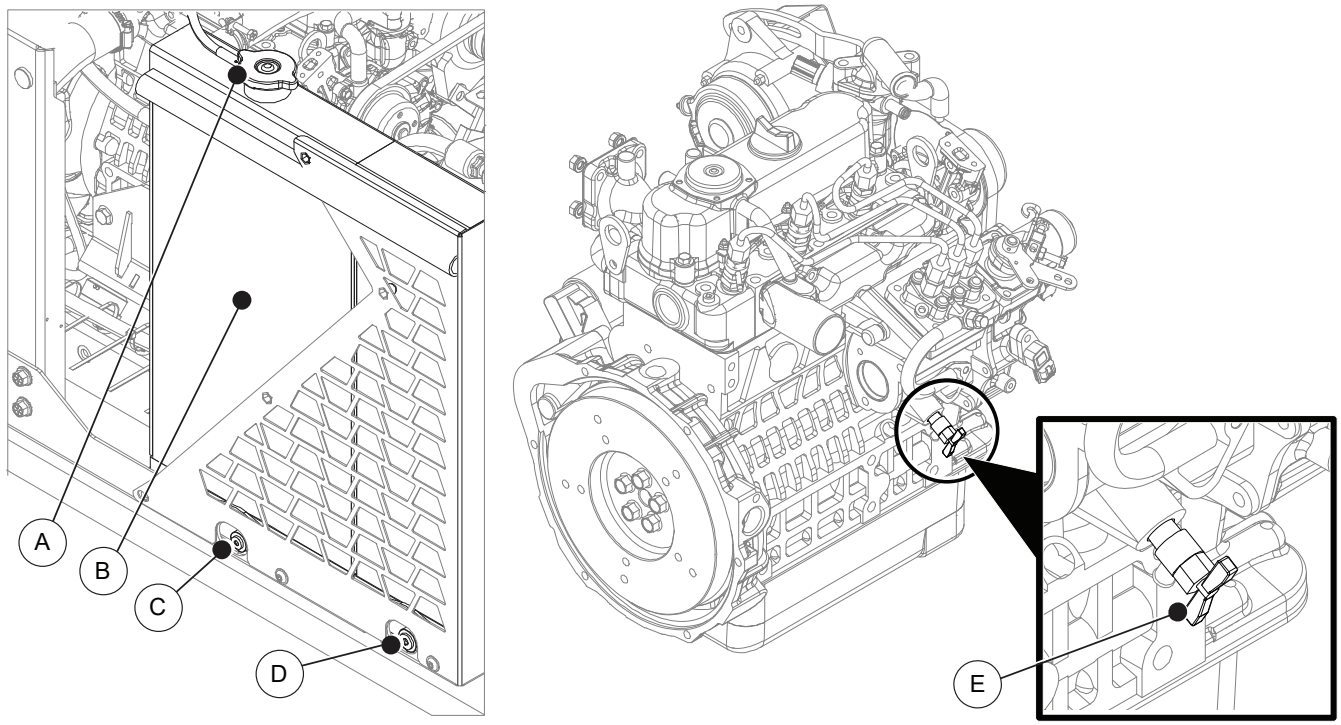

KEY	DESCRIPTION	KEY	DESCRIPTION
A	ENGINE RADIATOR CAP	D	COMPRESSOR COOLER DRAIN PLUG (REF)
B	RADIATOR	E	ENGINE COOLANT DRAIN COCK
C	RADIATOR DRAIN PLUG		

Figure 3-9: Engine Coolant System Maintenance

COOLANT REPLACEMENT

Prepare the radiator coolant as a 50/50 mixture (50% coolant, 50% distilled water). **DO NOT** use tap water to dilute the coolant; coolant can also be purchased premixed. The system will need approximately 1.2 gallons of 50/50 mixed solution.

1. With the system cooled enough to engage, open the radiator cap and fill reservoir with the mixed coolant. Replace and tighten the cap, then start the system and let it run for 15 minutes. Allow system to cool. Add additional fluid until the unit is mostly full. Start the machine and run for five minutes, then add more fluid if necessary.
2. Once the main radiator reservoir is filled, add additional coolant solution to the overflow tank to approximately half full, and replace the tank cap (refer to [**A**] in ***Figure 3-8***).
3. Dispose or recycle the flushed fluids per the environmental instructions listed on the coolant flush and coolant solution containers.

3.5 STORAGE AND INTERMITTENT USE

3.5.1 INTERMITTENT USE

If the unit is not used very regularly always treat the fuel with a fuel stabilizer.

Check all belts and hoses for signs of deterioration such as visible surface cracks, stiffness or discoloration.

3.5.2 LONG TERM STORAGE

Disconnect the battery cable that is connected to

the positive (+) side of the battery.

NOTE

For machines with bolt-on frame:

De-pressurize the air tank and open the drain valve on the tank.

If fuel tank present, fill the fuel tank with fuel and fuel stabilizer to prevent moisture build-up in the tank, and start up to cycle fuel stabilizer throughout engine before storing.

After fuel stabilizer has been cycled, cover the unit with a tarp or plastic to prevent the accumulation of dust, but leave the bottom open for air circulation.

SECTION 4: TROUBLESHOOTING

4.1 GENERAL INFORMATION

The information contained in this section has been compiled from years' worth of information gathered from the field. It contains symptoms and usual causes for the most common types of problems that may occur. All available data concerning the trouble should be systematically analyzed before undertaking any repairs or component replacement.

A visual inspection is worth performing for almost all problems and may avoid unnecessary additional damage to the machine. The procedures which can be performed in the least amount of time and with the least amount of removal or disassembly of parts, should be performed first. Adherence to a routine maintenance regimen will minimize the occurrence of many common problems. Refer to **Tables 5A** and **5B** in the **Maintenance Section** for a typical maintenance regimen program.

Although Vanair® strives to anticipate situations that may occur during the operation life of the machine package, the **Troubleshooting Guide** may not cover all possible situations. Be aware that additional troubleshooting information may be found in other sources such as the Engine Operation Manual and the Generator Operation Manual. Should the situation remain unresolved after exhausting available sources, contact the Vanair® Service Department at:

Vanair®, a Lincoln Electric Company
10896 West 300 North
Michigan City, IN 46360
Toll Free: (800) 526-8817
Telephone: (219) 879-5100
Service (toll free): (844) VAN-SERV
(844) 826-7378
vanair.com

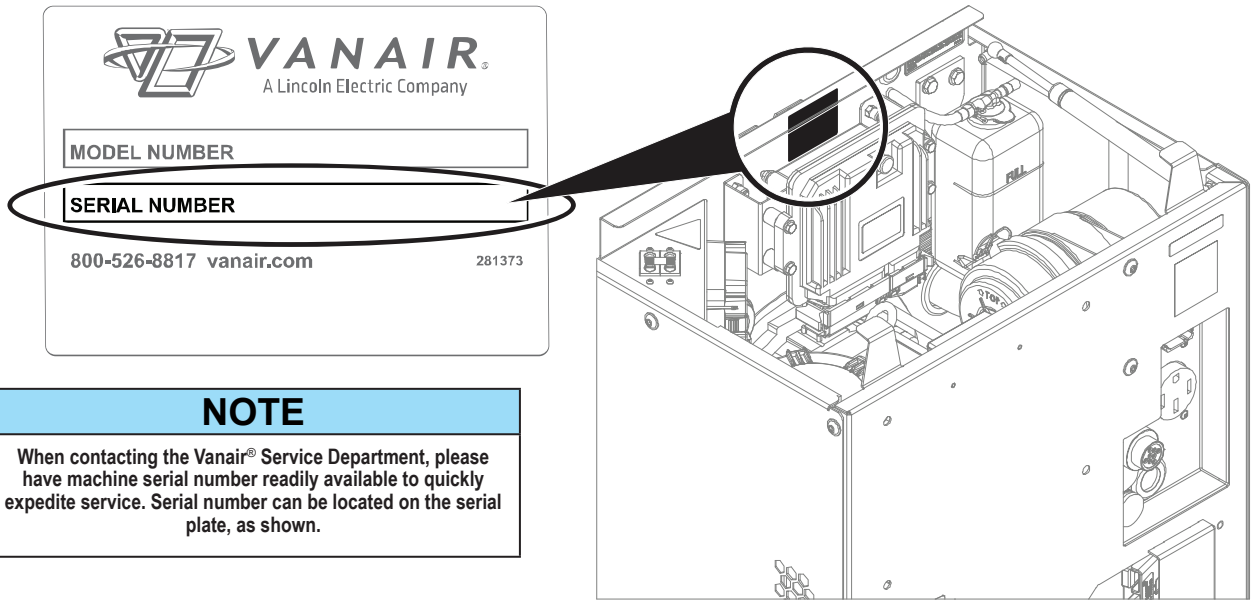

NOTE

When contacting the Vanair® Service Department, please have machine serial number readily available to quickly expedite service. Serial number can be located on the serial plate, as shown.

Figure 4-1: Machine Serial Plate / Serial Number Location

NOTE

When contacting the Vanair® Service Department, please have machine serial number on hand to quickly expedite service.

See *Figure 4-1* for machine serial plate and serial number location. For additional component serial plate/serial number locations, refer to *Figure W-1* in the Warranty Procedure Section for machine, and specific engine, compressor and generator serial plate locations.

⚠ WARNING

DO NOT operate any of the Air N Arc® 330 Diesel functions if there is a known unsafe condition.

Continued...

⚠ WARNING (continued)

Disable the equipment by disconnecting it from its power source. Install a lock-out tag to identify the equipment as inoperable to other personnel to prevent accidental application.

⚠ WARNING

Before starting, performing maintenance, or replacing parts, relieve the entire system pressure by opening the air tank drain/vent valve, which will vent all pressure to the atmosphere.

4.2 TROUBLESHOOTING GUIDE

Use Section 5, Illustrated Parts List, to visually identify and confirm any part number that may need to be replaced.

SYMPTOM	CAUSE	PREVENTION / CORRECTIVE ACTION
ENGINE [I]		
Engine will not crank	Faulty battery connection	Check for proper battery connections and battery charge.
	Battery out of power	Recharge or replace battery.
	Engine fuse blown	Check engine fuse: See ***Section 3.4.3, Servicing the System Fuses and Circuit Breakers***, and/or consult the Engine Operation Manual.
	Possible starter and/or solenoid problem	Replace if defective.
	Possible seized engine	Consult the Vanair® Service Department.
	Poor ground connection	Check and clean/renew connection.
Engine will not start	Low fuel and/or oil supply	Check fuel gauge. Check engine oil level. Replenish as necessary. Consult the Engine Operation Manual for additional information on engine maintenance.
	Pinched fuel line	Replace or reroute if necessary.
	Plugged fuel filter(s)	Replace if necessary. Refer to the Engine Operation Manual.
	Low battery voltage	Recharge or replace if necessary.
		Loose connections—tighten connections.
		Dirty connections—clean connections.
	Plugged engine air filter	Replace engine air filter. Refer to Engine Operation Manual.
	Defective oil pressure switch	Check continuity, and replace if necessary.
	Defective engine temperature switch	Check continuity, and replace if necessary.
	Poor ground connection	Check and clean/renew connection.

[I] For additional information concerning an engine problem, consult the Engine Operation Manual.

Continued on next page

4.2 TROUBLESHOOTING GUIDE

Use Section 5, Illustrated Parts List, to visually identify and confirm any part number that may need to be replaced.

SYMPTOM	CAUSE	PREVENTION / CORRECTIVE ACTION
ENGINE (continued) [I]		
Improper Control Operation: Engine does not speed up	Fuel filter partly plugged	Replace fuel filter. Refer to the Engine Operation Manual.
	Fuel filter partly plugged (continued)	Auxiliary fuel pump may be needed for remote fuel tank. Consult Vanair® Service Department.
	Pressure switch faulty	Replace pressure switch.
Improper Control Operation: Engine does not slow down replace relay.	Leak in control line	Check for leaks; replace line if necessary.
Engine overheats	Low oil level	Check engine oil level. Consult the Engine Operation Manual for additional information on engine maintenance.
	Located too close to obstruction	Move further from obstruction.
	Low coolant level	Add coolant.
	Engine oil filter plugged	Replace engine oil filter. Refer to Engine Operation Manual.
	Engine oil radiator plugged	Clear debris/dirt from cooler core.
	Restricted cooling air in or out	Clear debris/dirt from engine radiator.
Engine stops during operation	Low oil level	Check engine oil level. Consult the Engine Operation Manual for additional information on engine maintenance.
	High engine temperature	Let engine cool. Check for engine coolant level. Refer to Engine Overheats fault.
Gradual loss of engine power	Contaminated fuel	Draw and replace fuel supply.
	Engine air filter contaminated	Check engine air filter. Replace if necessary (refer to the Engine Operation Manual).
	Low fuel level	Add fuel.
	Fuel filter(s) contaminated	Check fuel filters. Refer to the Engine Operation Manual.
	Overload	Reduce load; check load use, and reduce.
	Engine not warmed up	Allow engine to warm up.
COMPRESSOR		
Compressor overheats This condition will cause a compressor shutdown and compressor fault light to turn on. Before restarting the compressor, determine the cause for overheating.	Operating temperature out of range	Verify Ambient temperature is within operating limits
	Low compressor oil level	Check oil level and refill to proper level if necessary (ensure machine is parked on a level surface).
	Obstructed cooler fins	Clear/clean if required.
	Insufficient air flow over cooler	Check for obstructions (frame, body, etc.) to cooling air flow.
	Defective temperature switch	Check switch; replace if necessary.
	Compressor oil filter plugged	Replace compressor oil filter. Consult **Section 3**, **Table 3A** for periodic oil filter system maintenance procedures.
	Fan not operating	Verify connection is secured properly.
		Replace fan if necessary.
Compressor shuts down	Compressor temperature switch opening	Check compressor oil level. Replenish if necessary.

[I] For additional information concerning an engine problem, consult the Engine Operation Manual.

Continued on next page

4.2 TROUBLESHOOTING GUIDE

Use Section 5, Illustrated Parts List, to visually identify and confirm any part number that may need to be replaced.

SYMPTOM	CAUSE	PREVENTION / CORRECTIVE ACTION
COMPRESSOR (continued)		
Compressor shuts down (continued)	Restricted cooling air intake	Reposition machine.
	Fan not operating	Check fan switch.
		Check ground connection.
		Check for / confirm +12V.
	Compressor oil filter plugged	Replace compressor oil filter. Consult **Section 3**, **Table 3A** for periodic oil filter system maintenance procedures.
	Clutch faulty	Inspect; replace if necessary.
	Plugged or restricted cooler core	Flush cooler. Consult the Vanair® Service Department for assistance in cleaning/flushing the cooler core.
	Contaminated cooler fins	Clean cooler fins.
Compressor will not build up pressure	Low compressor oil level	Check oil level and refill to proper level if necessary (ensure machine is parked on a level surface).
	Air demand too high	Check for leaks and take corrective action.
		Check air tools for wear, damage, or malfunctions. Replace or repair.
	Compressor capacity too low to accommodate demand	Substitute larger capacity compressor system.
	Compressor air filter plugged	Check compressor air filter. Replace if necessary.
	Verify engine speed is increasing	Consult Vanair® Service Department.
	Belt(s) slipping	Re-situate and adjust belt tension, or replace belt if necessary. Consult ***Section 3.4.1, Re-tensioning and Replacing the Serpentine Belts***.
	Service valve is open	Close service valve.
	Pressure sensor is malfunctioning	Check pressure sensor function/control line routing: adjust, repair or replace as necessary.
		Check for proper operation with an auxiliary air source. Replace if necessary.
	Inlet solenoid valve fails to open	Repair/replace inlet valve.
	Inlet solenoid faulty	Replace solenoid.
	Verify clutch is engaging	If not engaging consult Vanair® Service Department.
Compressor system over-pressures This condition will cause a compressor shutdown, and a fault light will turn on. Before restarting the compressor, determine the cause of the over-pressure. May also cause the relief valve to open.	Unload solenoid valve defective	Replace solenoid valve.
	Leak in air control line	Check for leaks and take corrective action.
	Restriction in control line	Clean if soiled; if ice is present, clear and remove.

Continued on next page

4.2 TROUBLESHOOTING GUIDE

Use Section 5, Illustrated Parts List, to visually identify and confirm any part number that may need to be replaced.

SYMPTOM	CAUSE	PREVENTION / CORRECTIVE ACTION
COMPRESSOR (continued)		
Compressor system over-pressures This condition will cause a compressor shutdown, and a fault light will turn on. Before restarting the compressor, determine the cause of the over-pressure. May also cause the relief valve to open. (continued)	Damaged/kinked control line	Check line for damage (wear, kinks, etc.). Re-route, re-tie or replace if necessary.
	Control line connections are not properly seated/poor connection quality	Check lines for proper seating/ensure line ends have been cut cleanly and are square. **DO NOT** use wire cutters: use a loom cutting tool or a clean, sharp razor blade.
	Inlet valve Teflon “O” ring popped out of groove	Replace “O” ring.
	Inlet valve piston is stuck in down position	Check for proper operation with an auxiliary air source—replace or rebuild inlet valve.
	Compressor shaft seal is leaking	Replace shaft seal with available kit.
	Minimum pressure/check valve is malfunctioning	Rebuild or replace check valve.
	Pressure sensor is malfunctioning	Check sensor for proper operation; replace if necessary and check controls.
	Defective safety valve	Replace safety valve.
	Plugged coalescer	Replace coalescer.
No service air output (see also Compressor will not build up pressure)	If equipped, OSHA valve/velocity fuse, not functioning properly	Reset or replace OSHA valve.
	Clogged compressor air filter	Check compressor air filter; replace if necessary.
	Verify ball valve is open	Open valve to allow service air flow.
	Verify that there are no leaks in the machine	Inspect the machine as per the Maintenance Table listings.
	Minimum pressure/check valve is malfunctioning	Rebuild or replace check valve.
	Belt not tensioned properly	Check belt tension; replace belt(s) if necessary. Refer to ***Section 3.4.1, Re-tensioning and Replacing the Serpentine Belts*** for belt maintenance or replacement procedures.
	Clutch failure	Replace clutch.
Excessive noise	Belt not tensioned properly	Check belt tension; replace belt(s) if necessary. Refer to ***Section 3.4.1, Re-tensioning and Replacing the Serpentine Belts*** for belt maintenance or replacement procedures.
System operating pressure below specified minimum	Air demand too high	Check air tools for wear, damage, or malfunctions. Replace or repair.
	Compressor capacity too low to accommodate demand	Substitute larger capacity compressor system.
	System leaks or is damaged	Inspect for leaks. Repair and/or replace damaged parts as necessary.
	Contaminated inlet valve	Remove valve and clean piston. Order inlet valve repair kit if necessary.

Continued on next page

4.2 TROUBLESHOOTING GUIDE

Use Section 5, Illustrated Parts List, to visually identify and confirm any part number that may need to be replaced.

SYMPTOM	CAUSE	PREVENTION / CORRECTIVE ACTION
COMPRESSOR (continued)		
System operating pressure below specified minimum (continued)	Inlet solenoid valve fails to open	Repair/replace inlet valve.
	Inlet valve frozen shut	Repair/replace inlet valve.
Excess amount of oil in air discharge	Machine not on level surface	Move machine to level surface.
	Compressor oil level too high	The correct oil level range is between 1/4 and 3/4 of the sight glass (refer to ***Figure 3-1***). Drain excess oil to correct level.
	Compressor oil level too high	The correct oil level range is between 1/4 and 3/4 of the sight glass (refer to ***Figure 3-1***). Drain excess oil to correct level.
	Scavenger system not operating	Inspect scavenger line for obstructions or leaks. Replace if necessary.
	Coalescer element plugged or damaged	Replace the coalescer element.
Excessive moisture in the compressed air	Moisture accumulating in air tank	Drain water from air tank.
Short cycling compressor	Not heating oil supply	Allow to run until oil achieves 180°F.
WELDER		
Welder and battery charger behave erratically	Connection cables or receptacles are soiled/contaminated	Check for twisted cables and/or soiled/contaminated or loose receptacle connections.
		Untwist and/or straighten out any suspected cable tensions. Carefully wipe off any contaminants to receptacle connectors before re-connecting. Replace any worn or damaged cables or receptacles. Contact Vanair® Service Department if behavior persists.
	Welding function is not drawing enough operating power	If running more than one function simultaneously, turn off competing function.
	Rods are faulty	Replace.
No welder output	Fuse at welder field blown	Replace the welder field fuse. Refer to ***Section 3.4.3, Servicing the System Fuses and Circuit Breakers***.
	Main cable loose connection	All Anderson (weld cable) connection plugs on machine and instrument panel.
No welder output in CC mode	Bad ground connect	Make sure of connection. Clean welding surface.
	Faulty electrical circuit	Check electrical circuit.

4.3 EXTREME CONDITION OPERATION

When operating in extreme cold or hot conditions, in the presence of high humidity, or at a high altitude, extra attention should be given to any indication that could lead to a serious problem. Engine power and compressor air output will be reduced at high altitude or hot ambient temperatures.

Machine review and maintenance check schedules should be more frequent than the normal suggestions given in th**e Routine Maintenance Schedule** (**Table 3A** in **Section 3**).

Become acquainted with the situation-adjusted operation approaches given in this section before operating the power system package in any type of extreme ambient condition. For additional operation information consult the Engine Operation Manual, or visit the engine manufacturer's web site given in that manual.

4.3.1 HIGH MOISTURE CONDITION OF COMPRESSOR OIL

Refer to ***Section 2.6.1, High Moisture Condition: Emulsification of Rotary Screw Compressor Oil***, in **Section 2, Operation** for description and prevention of moisture condition obstacles.

4.3.2 COLD WEATHER OPERATION

Refer to the Engine Operation Manual for cold weather recommendations for engine operation, and **Table 4.3A**. When the temperature is very low, extra care must be taken regarding oil changes and viscosity. Also, for the overall system operation, freezing of water contained in the piping can also be a factor.

4.3.3 HIGH TEMPERATURE OPERATION

Consult the information in **Table 4.3B** for preventative and/or repair measures. Reduce load duty cycle to less than 60% when operating in ambient temperatures above 104°F (40°C).

Extra care should be taken to keep the engine and air compressor clean and to not restrict the air flow around the unit. Consult the Engine Operation Manual for fuel, lubrication oil and cooling requirements under extreme temperatures.

When operating the machine in high temperature areas, precautions should be taken to prevent overheating. At the minimum, all coolers, including air passage ways around the coolers, should be free of debris and dirt. The fan, driven by the engine, is designed to run continuously to assure a constant flow of cooling air.

IMPORTANT

DO NOT run the machine with the roof panel open.

TABLE 4.3A: COLD WEATHER OPERATION

Symptom	Cause	Prevention / Corrective Action
Water freezes in the fuel line Lubrication oil viscosity increases	**WATER** Water in the fuel can freeze at temperatures below 32°F (0°C), blocking fuel lines. At an extremely cold temperature, the viscosity of lubrication oil may increase and the torque of starter may exceed its permissible value, hindering proper starting.	• Park the vehicle or equipment indoors when not in use. • Check the fuel filter regularly to insure that it contains no water. • Use a block heater. • Maintain the battery; this will make it easier to start a diesel engine in cold weather. • In below zero temperatures a fuel line deicer product may need to be used. • For additional engine precautions, consult the Engine Operator's Manual. • Vanair® recommends installation of the cold weather heater option kit. Consult **Table 7A** in **Section 7** for cold weather kit option. • Keep the fuel tank full to prevent condensation from forming inside the tank and lessen the chances of water getting in the fuel line. • The standard recommendation of 15W-40 engine oil is suitable for temperatures down to -4°F (-20°C). If temperatures are consistently below 30°F (-1°C), it is recommended that 5W-30 oil be used. If temperatures are below -25°F (-32°C), a high-performance, fully synthetic oil, such as AMSOIL 5W-30 should be used which is suitable to temperatures of -55°F (-48°C).
	Air lines freeze; moisture in hoses	• Ensure to operate the compressor at temperature and under load for 20 minutes in order to burn off excessive moisture. May need in-line de-icer to prevent freezing.

TABLE 4.3B: HIGH TEMPERATURE OPERATION		
Symptom	**Cause**	**Prevention / Corrective Action**
Overheating/high compartment temperatures Diminished engine performance	High ambient temperatures, confined spaces, soundproof cases and other reasons. Among these the most important factor is the temperature of the intake and cooling air.	• Extra care should be taken to keep the engine and air compressor clean and to not restrict the air flow around the unit. • Consult the Engine Operation Manual for fuel, lubrication oil and cooling requirements under extreme temperatures. • At the minimum, all coolers, including air passage ways around the coolers, should be free of debris and dirt. The fan, driven by the engine, is designed to run continuously to assure a constant flow of cooling air. • If high ambient overheating occurs, reduce the duty cycle. The operator should be aware that high temperatures can influence engine performance, which can directly effect some machine function capacity outputs.

The operator should be aware that high temperatures can influence engine performance, which can directly effect some machine function capacity outputs.

4.3.4 HIGH DUST CONTENT OPERATION

Consult the information in **Table 4.3C** for preventative and/or repair measures. When the machine is to be used in continuously dusty environments, special care must be taken with the engine's air cleaner and radiator.

4.3.5 HIGH ALTITUDE OPERATION

Engine horsepower will decrease by 3.5% for every 1,000 feet over 6,000 feet increase in altitude. At high altitude overall unit performance will deteriorate, and care will need to be taken not to overload the engine.

TABLE 4.3C: HIGH DUST CONTENT OPERATION		
Symptom	**Cause**	**Prevention / Corrective Action**
Overheating System contamination Stalling	Machine components exposed to frequent or constant dust interaction, can result in diminished system performance, or machine cessation.	• The intake air must be cleaned with the air cleaner—inspect the air filter frequently for dust build-up and replace as needed. • Ensure that the oil cooler fins are kept clean to prevent overheating. • If the machine is not being used for an extended period of time, an additional precaution, such as covering the machine with a tarp, will help to keep the inside of the machine free of dust particle accumulation. • For extreme cases of high dust content environments, machine fluids may need to be replaced at more frequent intervals. Adjust maintenance schedule accordingly.

SECTION 5: ORDERING PARTS / COMMON PARTS

5.1 PARTS ORDERING INFORMATION

Part orders should be placed through the distributor from whom the unit was purchased. If for any reason parts cannot be obtained in this manner, contact the factory directly at the address or phone numbers below.

When ordering parts always indicate the Serial Number of the machine package. This can be obtained form the Bill of Lading for the machine package, or from the unit's serial number plate. See ***Figure 5-1*** for location of machine package serial plate. **Consult Table 5A: Recommended Spare Parts List** on the next page for a listing of replacement parts.

Vanair®, a Lincoln Electric Company
10896 West 300 North
Michigan City, IN 46360
Toll Free: (800) 526-8817
Telephone: (219) 879-5100
Service (toll free): (844) VAN-SERV
(844) 826-7378
vanair.com

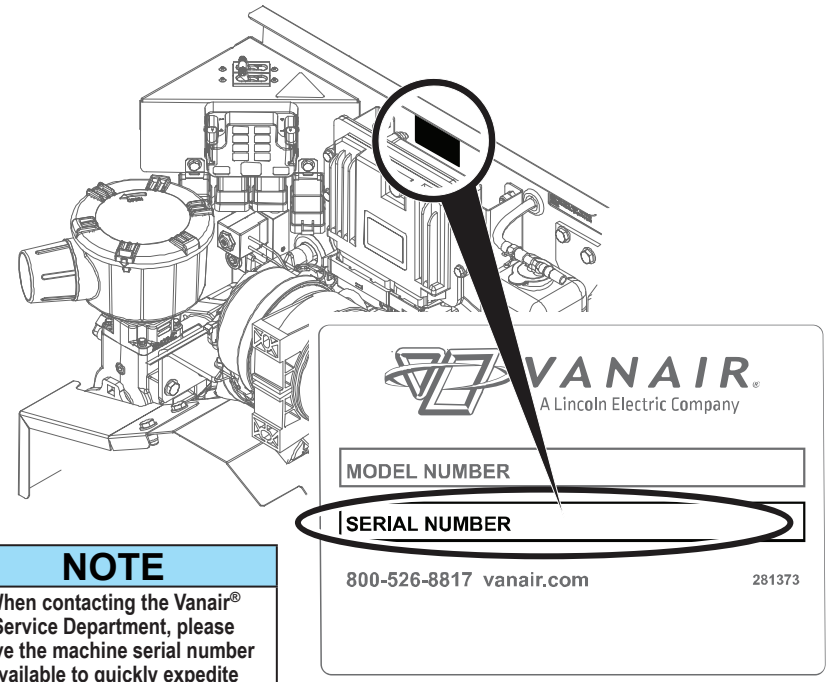

NOTE

When contacting the Vanair® Service Department, please have the machine serial number available to quickly expedite service. Serial number can be located on the serial plate, as shown.

Refer to *Figure W-1* in the Warranty Section for locations of the three machine Serial Tags, which all contain the machine serial number for quick access.

Figure 5-1: Machine Serial Plate / Serial Number Location

TABLE 5A: RECOMMENDED SPARE PARTS LIST

NOTE **For a complete list of available option parts for order, refer to Table 5B: Available Options List.**

FULL SERVICE MAINTENANCE KITS

KEY NO.	ORDER NO.	DESCRIPTION	QTY
1	KIT1505	Kit, Compressor First 50 Hour Service [I & II]	1
2	KIT1501	Kit, Compressor 500 Hour Service [II & III]	1
3	KIT1154-01	Kit, Engine Service - filters [IV]	1
3	KIT1552ID	*Refer to footnote [V] below for this kit*	1
4	[VI]	Kit, Compressor Shaft Seal Replacement	1

[I] Compressor 50 Hour Service Kit (**no. KIT1505**) consists of: Vanair® oil filter replacement element **no. 266801**, Vanair® air/oil spin-on separator **no. 264470**, and one (1) gallon of Vanair® Vanguard™ High Pressure Compressor oil **no. 275691-1GAL** [II].

[II] Use only Vanair® Vanguard™ High Pressure Premium Synthetic Oil and Genuine Vanair® Parts. Substituting non-Vanguard™ Oil or non-genuine Vanair® filter components WILL VOID THE COMPRESSOR WARRANTY! Inspect and replace damaged components before operation. System fill capacity is approximately four (4) quarts.

[III] Compressor 500 Hour Service Kit **(no. KIT1501)** consists of: Vanair® oil filter replacement element **no. 266801**, Vanair® air/oil spin-on separator **no. 264470**, Vanair® air filter element **no. 280661-1**, and one (1) gallon of Vanair® Vanguard™ High Pressure Compressor oil **no. 275691-1GAL** [II].

[IV] Engine Kit (**no. KIT1154-01**) consists of: air filter replacement **no. 276688-002**, oil filter replacement element **no. EN38480**, engine fuel filter **no. EN273303-01**, in-line fuel filter **no. 280724**, suction fuel filter **no. RC276268**, engine fuel filter element **no. RC77662**, Kubota 15W-40 motor oil **no. 276733** (one gallon). **DO NOT** mix different oil weights.

[V] This KIT is a retro-fit kit that can be installed on current production machines. This incorporates a timer that will put the machine into by-pass after 2.5 mins of not having air demand, with the compressor activated. After going into by-pass, if air demand is needed the machine will automatically go into high speed and the timer will reset.

[VI] For kit component details consult the Vanair® Service Department.

INDIVIDUAL MAINTENANCE COMPONENTS

KEY NO.	DESCRIPTION	ORDER NO.	QTY	KEY NO.	DESCRIPTION	ORDER NO.	QTY	KEY NO.	DESCRIPTION	ORDER NO.	QTY
5	Filter, replacement element engine oil	EN38480	1	11	Filter, Vanair® replacement compressor oil	266801	1	17	Relay, 500A 12V coil NO	EL270483	5
6	Filter, replacement engine fuel	EN273303-01	1	12	Brushes, alternator generator	285121	1	18	Belt, powretrain drive (40 CFM)	287314	1
7	Filter, replacement engine air	276688-002	1	13	Breaker, manual reset 20A (panel mount)	CO62617	2	19	Belt, poly k v-belt 32.25” (60 CFM)	283622	1
8	Filter, replacement in-line fuel [VII]	280724	1	14	Boot, circuit breaker (on instr panel)	PR270548	2	20	Fuses	[X]	1
9	Oil, engine 15W-40 (gallon) [VIII]	276733-GAL	1	15	Battery, 12V replacement	[IX]	1	21	Assembly, bolt-on frame	033345	1
10	Oil, Vanair® Vanguard™ High Pressure Compressor (gallon)	275691-1GAL	1	16	Coolant, anti-freeze 50/50 ethylene/glycol (gallon)	84400-001	1	22	Belt, micro-V 8-rib K-sect 30.755 in (engine fan / alternator driver belt replacement)	286701	1

[VII] In-line filter is used for machines with remote tank.

[VIII] Refer to the Engine Operation Manual for details on engine oil, including seasonal oil viscosities. **DO NOT** mix different oil viscosities.

[IX] Due to shipping regulations and restrictions pertaining to lead acid batteries, Vanair® recommends procuring a replacement battery from a localized source. Two possible replacement models include: BatteriesPlus® no. SLi96R, and NAPA battery no. BAT 7590.

[X] Some standard components, such as fuses, may be obtained quicker and more economically from local sources, such as an auto supply store, etc. Refer to ***Figure 3-6*** in **Section 3, Maintenance**, for fuse locations.

PLEASE NOTE: WHEN ORDERING PARTS, INDICATE MACHINE SERIAL NUMBER (Refer to *Figure 5-1* on previous page for location)

TABLE 5B: AVAILABLE OPTIONS LIST

KEY NO.	OPTION ITEM	DESCRIPTION	PART ORDER NUMBER	QTY
1	BATTERY BOOST CABLES	These cables are 25 feet in length, with quik-connect ends.	MA269938	1 set
2	30 GALLON REMOTE AIR TANK ASSEMBLY	This remote-mounted air option allows for an additional capacity for air storage	OA49645	1
3	DUAL 14 GALLON (28 GALLON TOTAL) AIR TANK ASSEMBLY	This remote-mounted air option allows for an additional capacity for air storage	032708	1
4	SINGLE 14 GALLON AIR TANK ASSEMBLY	This remote-mounted air option allows for an additional capacity for air storage	032707	1
5	BATTERY	12 volt, sealed lead acid.	MA274011	1
6	WELD HELMET	2 x 4 auto-darkening lens, solid color (blue)	MA269903	1
7	WELD HELMET LENS	Replacement lens for welding shield	MA270500	
8	WELD LEAD	25 feet in length, 1/0 cable with electrode holder and connector	MA269814-25	1
9	WELD LEAD	50 feet in length, 1/0 cable with electrode holder and connector	MA269814-50	1
10	WELD LEAD	25 feet in length, 1/0 cable with ground clamp, and connector	MA269815-25	1
11	WELD LEAD	50 feet in length, 1/0 cable with ground clamp, and connector	MA269815-50	1
12	ISOLATOR (BOLT DOWN)	Used to dampen vibration transferred from direct mounting of package. One per mounting bolt (x 4) needed.	KIT1202-001	1*
13	BLOCK HEATER	120V AC	MA273477	1
14	2/0 WELD CABLE ASSEMBLY	Electrode	MA274493	1
15	2/0 WELD CABLE ASSEMBLY	Ground clamp	MA274493	1

* Kit contains four (4) complete isolators.

5.2 DECAL GROUP - 1 OF 2

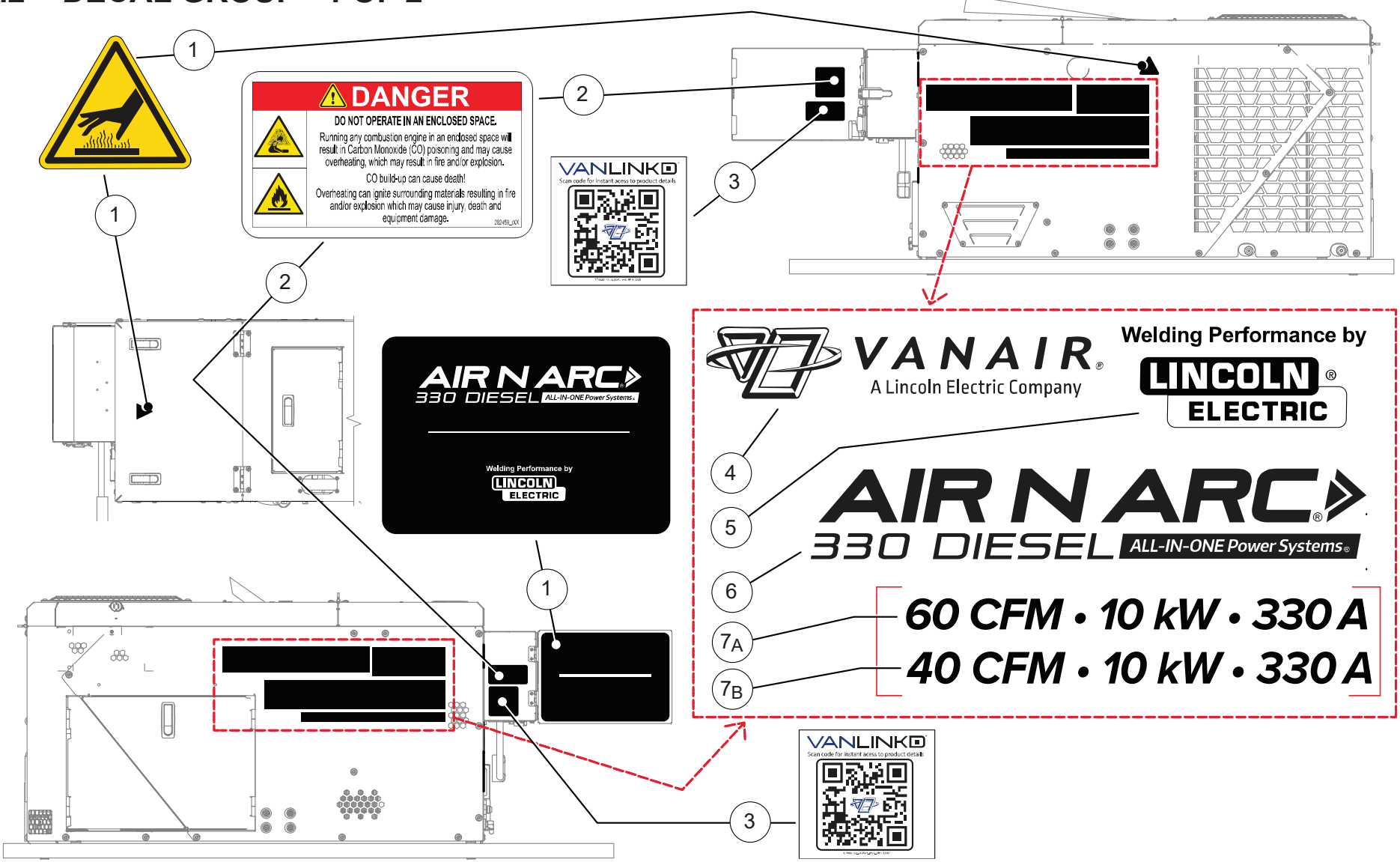

6110176ID_r1

5.2 DECAL GROUP - 1 OF 2

ITEM	DESCRIPTION	PART NUMBER	QTY
1	DECAL, WARNING HOT TRIANGLE 2.0"	281046	2
2	DECAL, DANGER DO NOT OPERATE IN AN ENCLOSED SPACE (4" X 2")	282459	3
3	DECAL, QR CODE 330D (2022)	283891	2
4	LOGO, VANAIR - A LINCOLN ELECTRIC COMPANY, HORIZONTAL	275056-C	2
5	LOGO, WELDING PERFORMANCE BY LINCOLN ELECTRIC (7.5 X 3.1)	282948-01	2
6	LOGO, AIR N ARC 330D (18.6 X 3.0)	282944-01	3
7A	LOGO, AIR N ARC 330D PERFORMANCE BADGE - 60 CFM (14.9 X 1.0)	282945-01	2
7B	LOGO, AIR N ARC 330D PERFORMANCE BADGE - 40 CFM (14.9 X 1.0)	286263	2
PLEASE NOTE: WHEN ORDERING PARTS, INDICATE MACHINE SERIAL NUMBER.			

⚠ WARNING

DO NOT REMOVE OR COVER ANY SAFETY DECAL. Replace any safety decal that becomes damaged or illegible.

5.2 DECAL GROUP - 2 OF 2

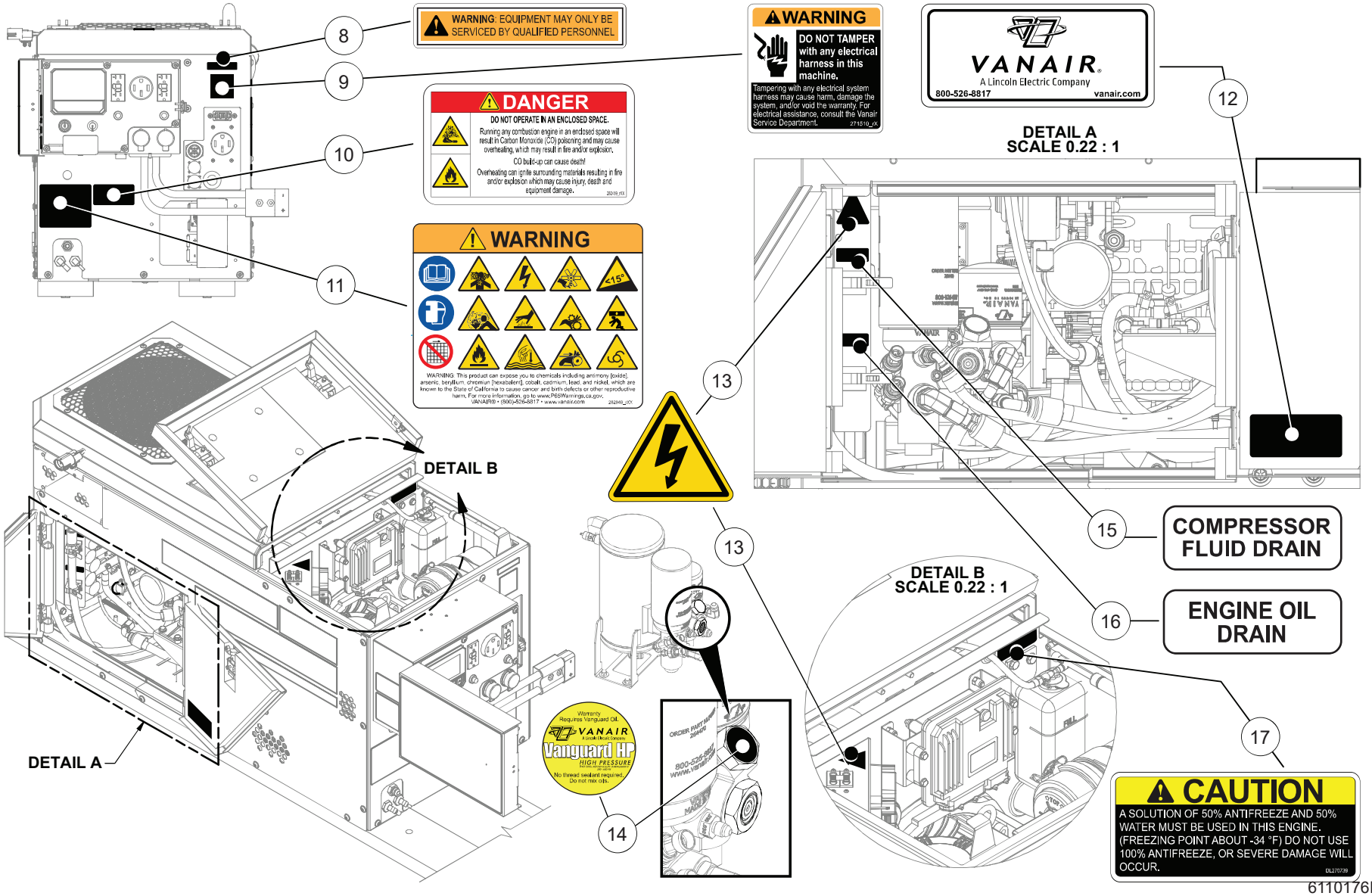

6110176ID_r1

5.2 DECAL GROUP - 2 OF 2

ITEM	DESCRIPTION	PART NUMBER	QTY
8	DECAL, LOGO INSTRUMENT PANEL COVER	284579	1
9	DECAL, WARNING ELECTRIC TAMPER	271510	1
10	DECAL, DANGER DO NOT OPERATE IN AN ENCLOSED SPACE (4" X 2")	282459	3
11	DECAL, WARNING TRIANGLES ONLY 330D	282949	1
12	DECAL, VANAIR 4 1/2 X 2	265605	1
13	DECAL, WARNING ELECTRICAL SHOCK 2.0" TRIANGLE	281236	3
14	DECAL, VANGUARD HP OIL FILL Ø1.13	263533-6	1
15	DECAL, LABEL COMPRESSOR FLUID DRAIN	275054	1
16	DECAL, LABEL ENGINE OIL DRAIN	275053	1
17	DECAL, 50/50 MIX, RADIATOR	DL270739	1
PLEASE NOTE: WHEN ORDERING PARTS, INDICATE MACHINE SERIAL NUMBER.			

⚠ WARNING

DO NOT REMOVE OR COVER ANY SAFETY DECAL. Replace any safety decal that becomes damaged or illegible.

5.3 WIRING DIAGRAM - AIR N ARC® 330 DIESEL, 1 OF 4

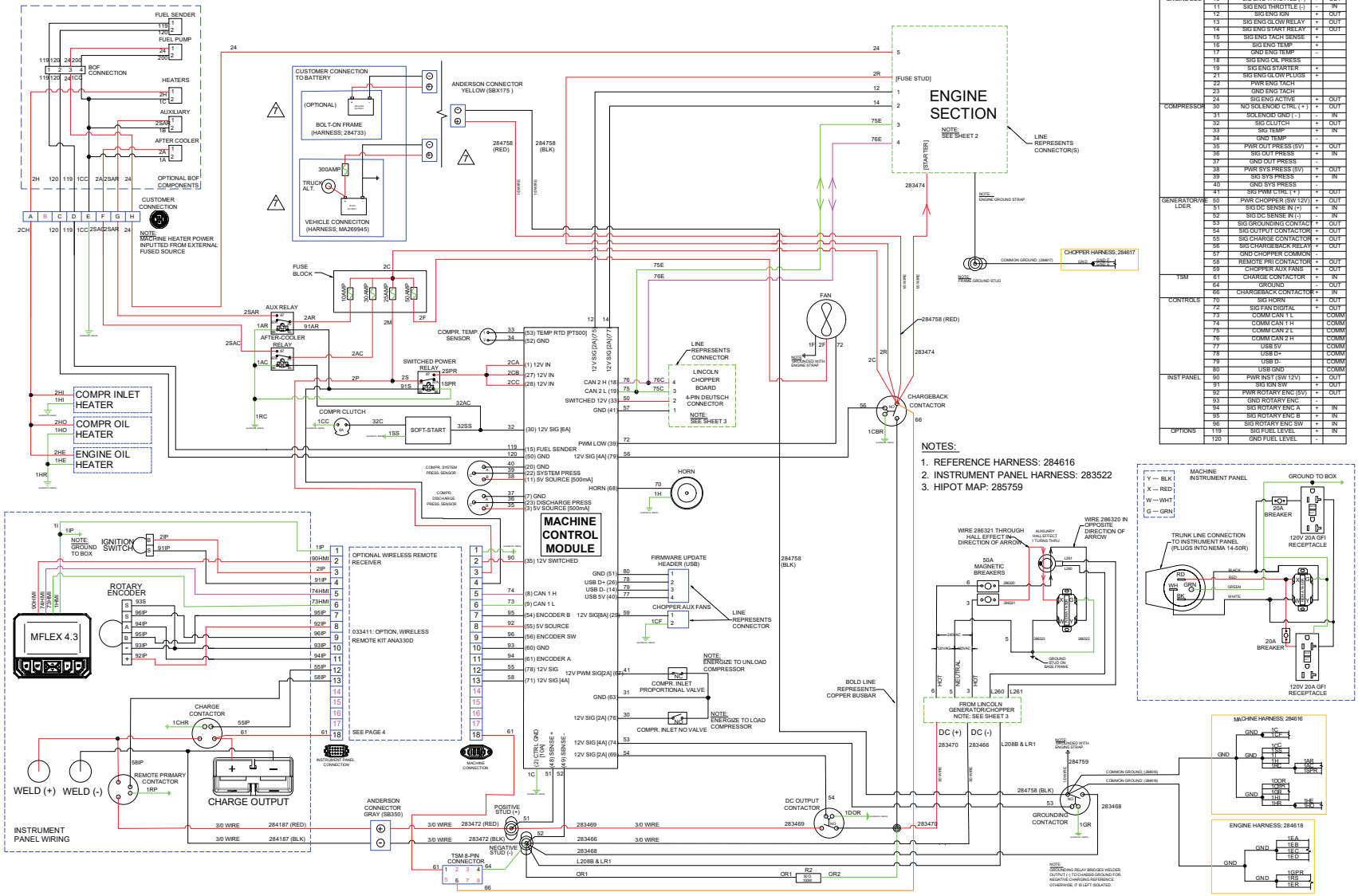

WIRING INFORMATION				
SYSTEM	WIRE #	DESCRIPTION	+/-	IN/OUT
COMMON	1	GND CHASSIS	-	
	2	PWR BATTERY 12V(+)	+	
ENGINE ECU	10	SIG ENG THROTTLE (+)	+	OUT
	11	SIG ENG THROTTLE (-)	-	IN
	12	SIG ENG IGN	+	OUT
	13	SIG ENG GLOW RELAY	+	OUT
	14	SIG ENG START RELAY	+	OUT
	15	SIG ENG TACH SENSE	+	
	16	SIG ENG TEMP	+	
	17	GND ENG TEMP	-	
	18	SIG ENG OIL PRESS		
	19	SIG ENG STARTER	+	
	21	SIG ENG GLOW PLUGS	+	
	22	PWR ENG TACH		
	23	GND ENG TACH		
	24	SIG ENG ACTIVE	+	OUT
COMPRESSOR	30	NO SOLENOID CTRL (+)	+	OUT
	31	SOLENOID GND (-)	-	IN
	32	SIG CLUTCH	+	OUT
	33	SIG TEMP*	+	IN
	34	GND TEMP	-	
	35	PWR OUT PRESS (5V)	+	OUT
	36	SIG OUT PRESS	+	IN
	37	GND OUT PRESS	-	
	38	PWR SYS PRESS (5V)	+	OUT
	39	SIG SYS PRESS	+	IN
	40	GND SYS PRESS	-	
	41	SIG PWM CTRL (+)	+	OUT
GENERATOR/WELDER	50	PWR CHOPPER (SW 12V)	+	OUT
	51	SIG DC SENSE IN (+)	+	IN
	52	SIG DC SENSE IN (-)	-	IN
	53	SIG GROUNDING CONTACTOR	+	OUT
	54	SIG OUTPUT CONTACTOR	+	OUT
	55	SIG CHARGE CONTACTOR	+	OUT
	56	SIG CHARGEBACK RELAY	+	OUT
	57	GND CHOPPER COMMON	-	
	58	REMOTE PRI CONTACTOR	+	OUT
	59	CHOPPER AUX FANS	+	OUT
TSM	61	CHARGE CONTACTOR	+	IN
	64	GROUND	-	OUT
	66	CHARGEBACK CONTACTOR	+	IN
CONTROLS	70	SIG HORN	+	OUT
	72	SIG FAN DIGITAL	+	OUT
	73	COMM CAN 1 L		COMM
	74	COMM CAN 1 H		COMM
	75	COMM CAN 2 L		COMM
	76	COMM CAN 2 H		COMM
	77	USB 5V		COMM
	78	USB D+		COMM
	79	USB D-		COMM
	80	USB GND		COMM
INST PANEL	90	PWR INST (SW 12V)	+	OUT
	91	SIG IGN SW	+	OUT
	92	PWR ROTARY ENC (5V)	+	OUT
	93	GND ROTARY ENC	-	
	94	SIG ROTARY ENC A	+	IN
	95	SIG ROTARY ENC B	+	IN
	96	SIG ROTARY ENC SW	+	IN
OPTIONS	119	SIG FUEL LEVEL	+	IN
	120	GND FUEL LEVEL	-	

284634_r8_1

5.3 WIRING DIAGRAM - AIR N ARC® 330 DIESEL, 2 OF 4

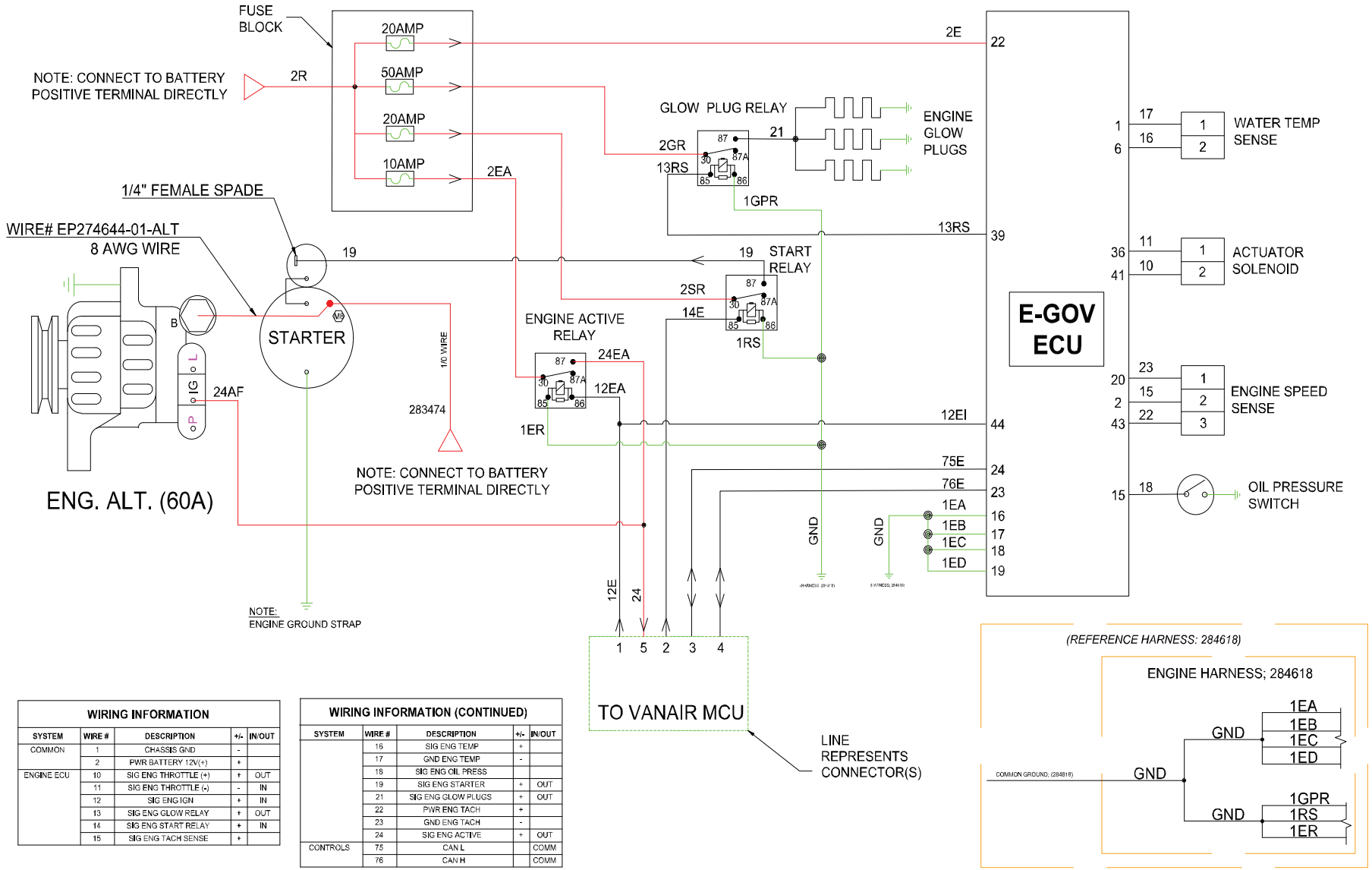

WIRING INFORMATION				
SYSTEM	WIRE #	DESCRIPTION	+/-	IN/OUT
COMMON	1	CHASSIS GND	-	
	2	PWR BATTERY 12V(+)	+	
ENGINE ECU	10	SIG ENG THROTTLE (+)	+	OUT
	11	SIG ENG THROTTLE (-)	-	IN
	12	SIG ENG IGN	+	IN
	13	SIG ENG GLOW RELAY	+	OUT
	14	SIG ENG START RELAY	+	IN
	15	SIG ENG TACH SENSE	+	

WIRING INFORMATION (CONTINUED)				
SYSTEM	WIRE #	DESCRIPTION	+/-	IN/OUT
	16	SIG ENG TEMP	+	
	17	GND ENG TEMP	-	
	18	SIG ENG OIL PRESS		
	19	SIG ENG STARTER	+	OUT
	21	SIG ENG GLOW PLUGS	+	OUT
	22	PWR ENG TACH	+	
	23	GND ENG TACH	-	
	24	SIG ENG ACTIVE	+	OUT
CONTROLS	75	CAN L		COMM
	76	CAN H		COMM

284634_r8_2

5.3 WIRING DIAGRAM - AIR N ARC® 330 DIESEL, 3 OF 4

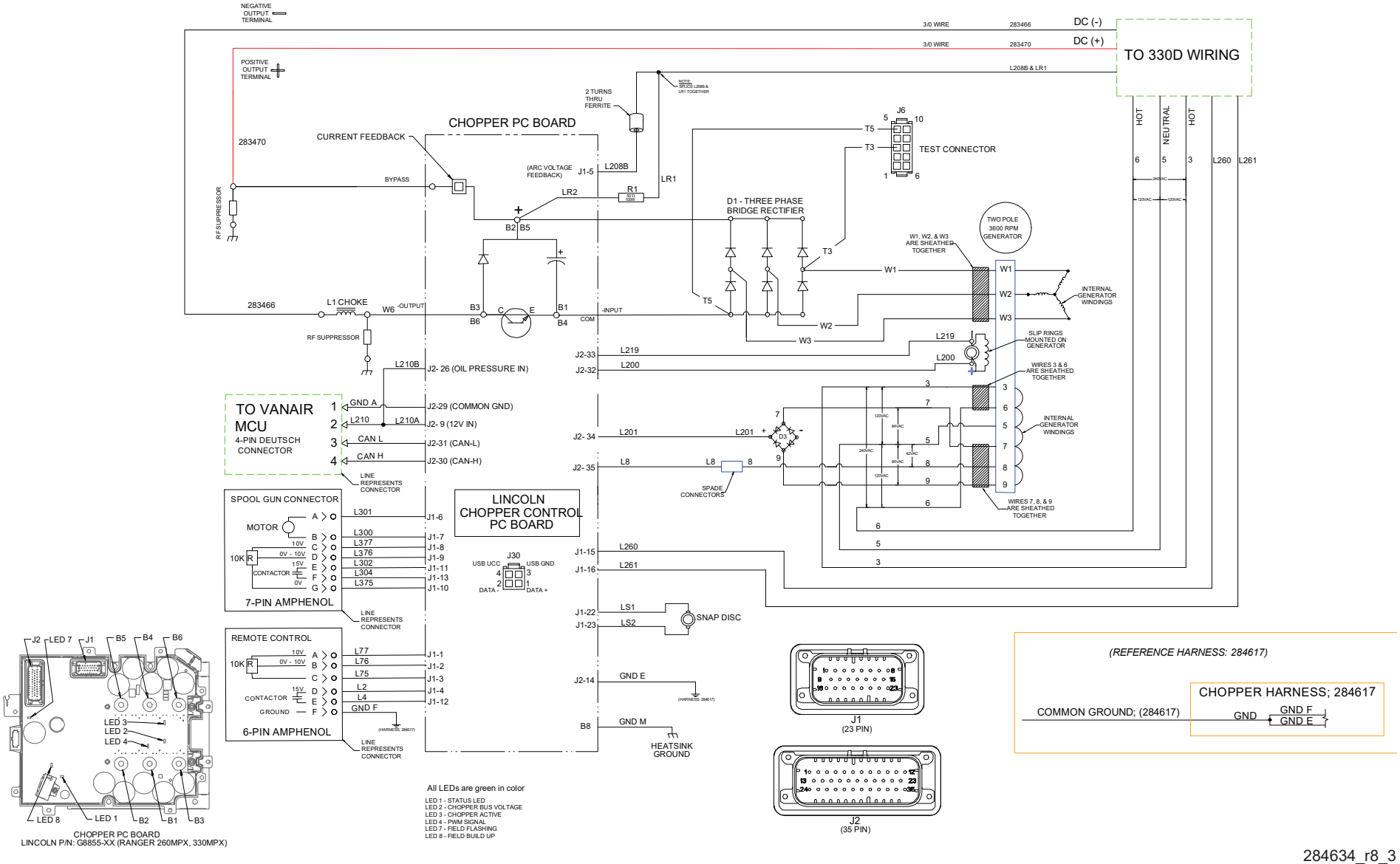

5.3 WIRING DIAGRAM - AIR N ARC® 330 DIESEL, 4 OF 4

033411 - OPT, WIRELESS REMOTE KIT 915MHZ ANA330D

288836 - HARNESS, 330D WIRELESS REMOTE RECIEVER

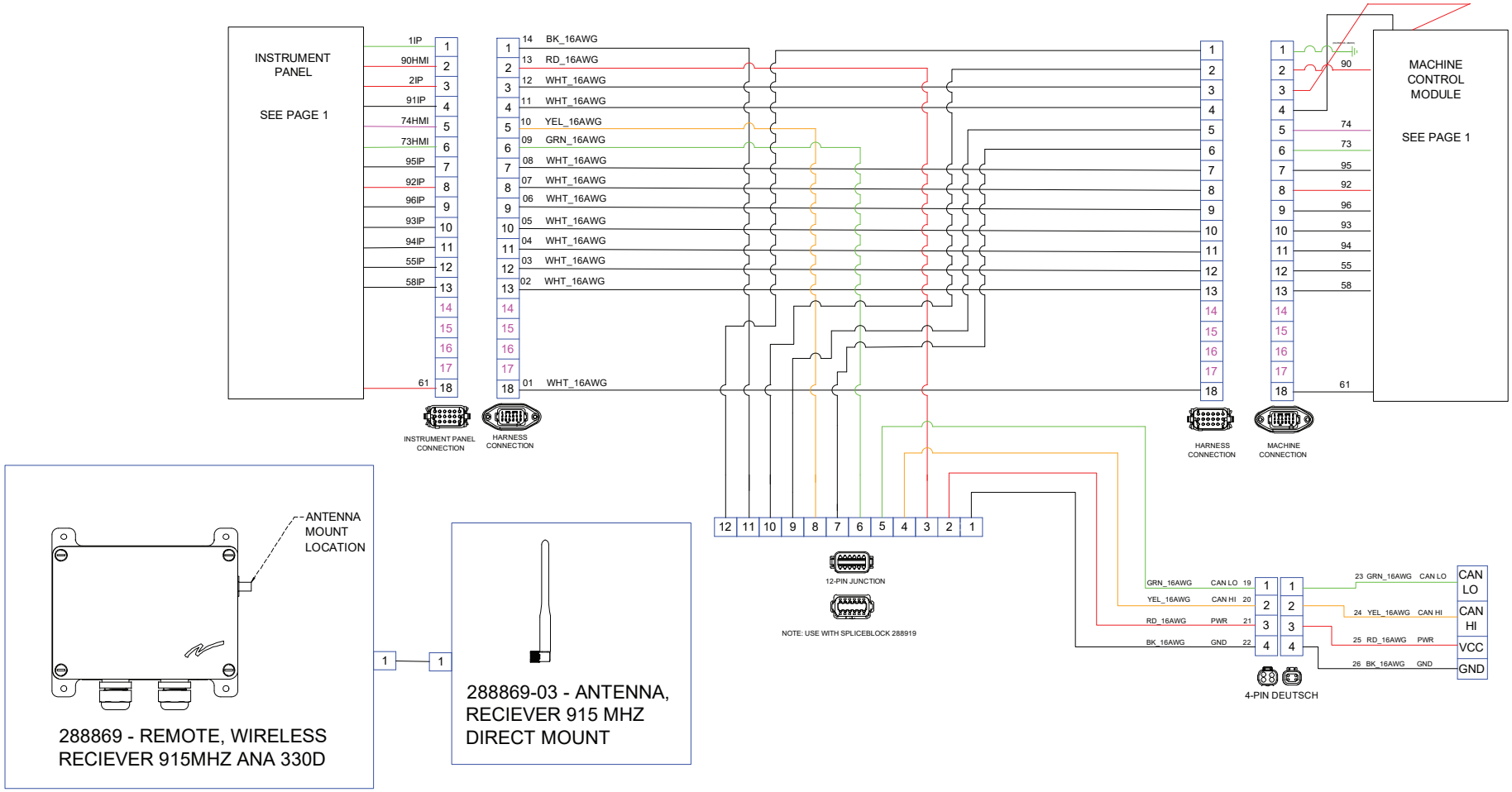

284634_r8_4

5.4 FLOW SCHEMATIC - AIR N ARC® 330 DIESEL, COMPRESSOR SYSTEM

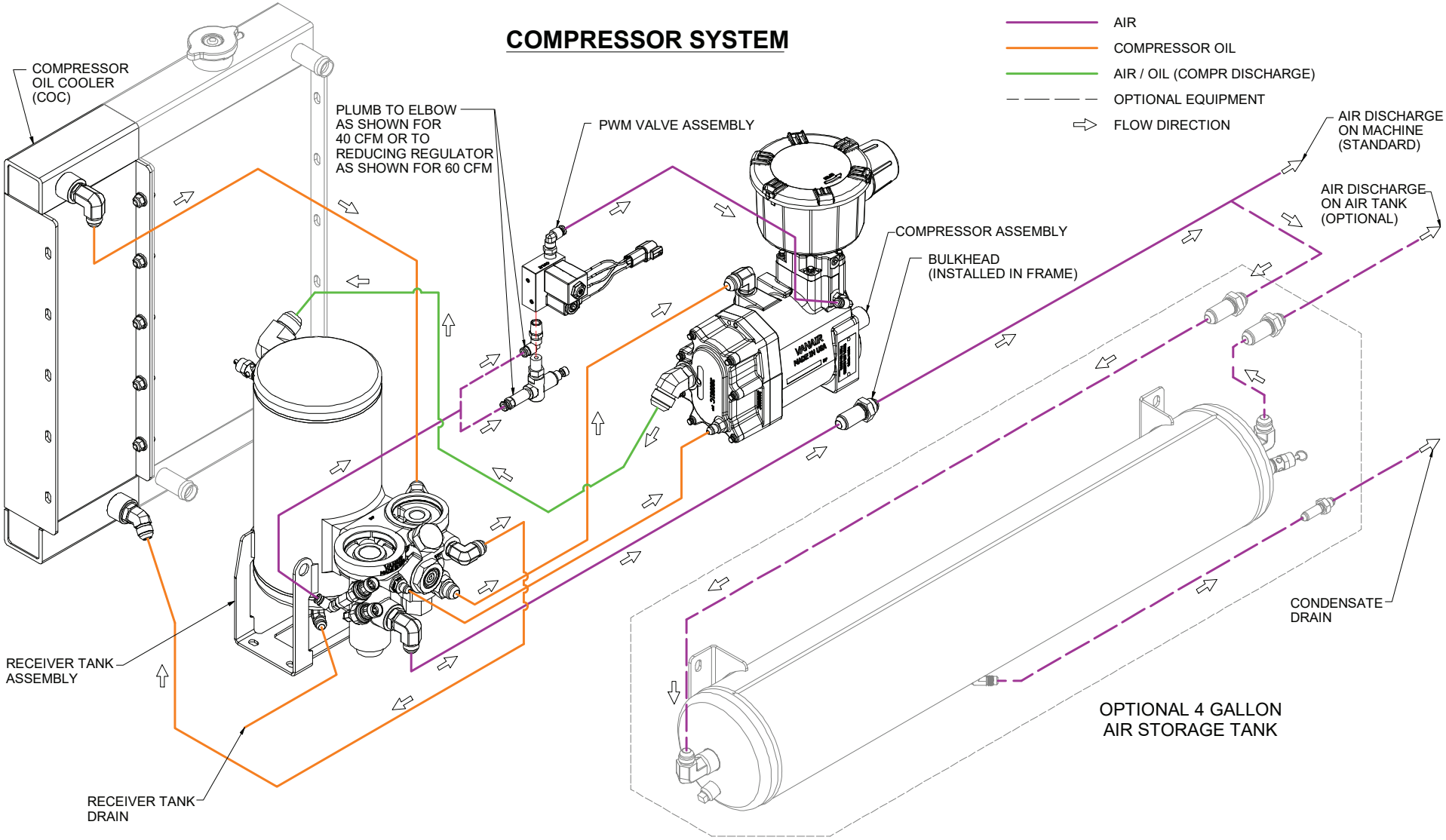

284237_r1_1

5.5 FLOW SCHEMATIC - AIR N ARC® 330 DIESEL, ENGINE / FUEL SYSTEM

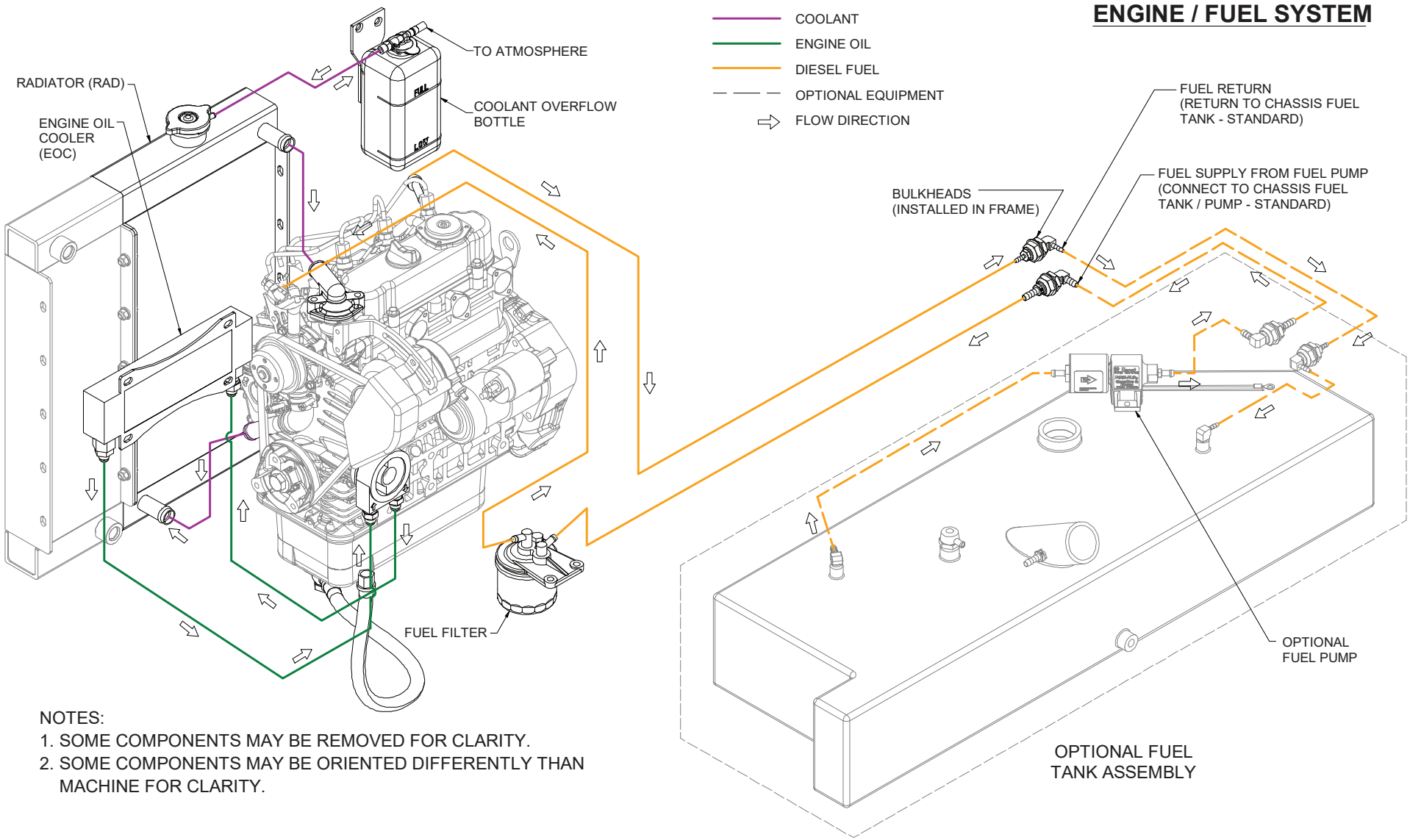

NOTES:
1. SOME COMPONENTS MAY BE REMOVED FOR CLARITY.
2. SOME COMPONENTS MAY BE ORIENTED DIFFERENTLY THAN MACHINE FOR CLARITY.

284237_r1_2

TABLE 5C: MAINTENANCE TRACKING LOG

DATE	DESCRIPTION OF MAINTENANCE	PART(S) REPLACED	DATE	DESCRIPTION OF MAINTENANCE	PART(S) REPLACED

BLANK PAGE

VANAIR®

A Lincoln Electric Company

VANAIR® USERS GUIDE

Vanair®, a Lincoln Electric Company
10896 West 300 North
Michigan City, IN 46360
Telephone Toll Free:
(800) 526-8817
Service (toll free):
(844) VAN-SERV
(844) 826-7378
Telephone: (219) 879-5100
vanair.com

Printed in the U.S.A.

Specifications subject t
change without prior notice

052282
052565
033345

MARCH 31, 2026