VIPER™ GAS

GASOLINE ENGINE-DRIVEN, 55-80 CFM, 100-175 PSIG, ROTARY SCREW AIR COMPRESSOR

OPERATION MANUAL & PARTS LIST

NOTE

Making unauthorized modifications to the system components WILL VOID THE WARRANTY!

Always inform Vanair® Manufacturing, Inc., before beginning any changes to the Viper™ Gasoline system.

⚠ DANGER

DO NOT OPERATE IN AN ENCLOSED SPACE.

Running any combustion engine in an enclosed space will result in Carbon Monoxide (CO) poisoning and may cause overheating, which may result in fire and/or explosion.

CO build-up can cause death!

Overheating can ignite surrounding materials resulting in fire and/or explosion which may cause injury, death and equipment damage.

IMPORTANT

An enclosed space refers to any area partially or fully enclosed by walls, a roof, or other boundaries.

These spaces can limit natural ventilation, restrict airflow, trap hazardous gases, and increase the risk of heat build-up, fire, or explosion.

It is the responsibility of the installation party to determine and mount Vanair® engine driven equipment in a way that ensures proper airflow and ventilation for safe operation. Failure to provide proper ventilation and clearances may result in hazardous conditions.

Vanair® assumes no responsibility or liability for installations it did not perform.

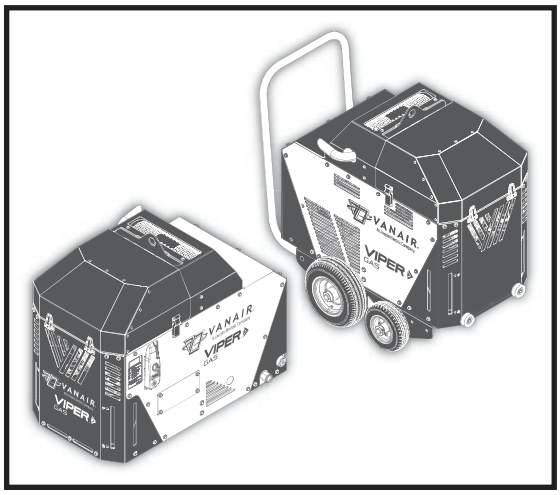

VANAIR®
A Lincoln Electric Company

Vanair® Manufacturing, Inc.
A Lincoln Electric Company

10896 West 300 North
Michigan City, IN 46360
Telephone: (800) 526-8817
Service: (844) VAN-SERV
service@vanair.com
sales@vanair.com
vanair.com

KEEP THE MANUAL WITH THE VEHICLE OR EQUIPMENT

⚠ IMPORTANT

Read this manual before installing, operating or servicing this equipment. Failure to comply with the operation and maintenance instructions in this manual can result in personal injury, and can void the equipment warranty.

NOTE

This publication contains the latest information available at the time of preparation. Every effort has been made to ensure accuracy.

Vanair® Manufacturing, Incv. reserves the right to makev design change modifications or improvements without prior notification.

NOTE

Use only Vanair® Vanguard™ Premium Synthetic Compressor Oil and Genuine Vanair® Parts. Inspect and replace damaged components before operation. Substituting non-Vanair® oil or non-genuine Vanair® filter components WILL VOID THE COMPRESSOR WARRANTY!

P/N: 090195-OP_r1
Effective Date: JULY 14, 2025

DEV

©2025 Vanair® Manufacturing, Inc.
A Lincoln Electric Company
All rights reserved

AIR N ARC®

ALL-IN-ONE POWER-SYSTEMS®

RELIANT™ SERIES

POWERFLEX™ SERIES

PRO SERIES

CONTRACTOR SERIES

VIPER™ SERIES

UTILITY MOUNTS

VANAIR® VANTAGE WARRANTY

This limited warranty supersedes all previous Vanair® warranties and is exclusive with no other guarantees or warranties expressed or implied.

LIMITED WARRANTY—Subject to the expressed terms and conditions set forth below, Vanair®, a Lincoln Electric Company ("Vanair"), of Michigan City, Indiana (USA), warrants to the original retail purchaser of new Vanair® equipment that such equipment is free from defects in materials and workmanship when shipped by Vanair®.

For warranty claims received by Vanair® within the applicable warranty periods described below, Vanair® will repair or replace any warranted equipment, parts or components that fail due to defects in material or workmanship or refund the purchase price for the equipment, at Vanair's discretion. Vanair® is not responsible for time or labor to gain access to the machine to perform work. WARRANTY WILL BE VOID IF GENUINE VANAIR® PARTS AND FLUIDS ARE NOT USED.

Vanair® must be notified in writing within thirty (30) days of any such defect or failure. All warranty or returns must be pre-authorized in writing prior to performing warranty work. Call Vanair® for process and forms. Vanair® will provide instructions on the warranty claim procedures to be followed.

ALL WARRANTY OR RETURNS MUST BE PRE-AUTHORIZED PRIOR TO PERFORMING ANY WARRANTY WORK.

Warranty will commence upon receipt of the Warranty Registration Card. If the Warranty Registration Card is not received within six (6) months of shipment from Vanair®, the warranty commencement date shall be thirty (30) days from the date of shipment from Vanair®. Records of warranty adherence are the responsibility of the end user.

1. Lifetime Warranty Parts – 3 Years Labor
   - Rotary Screw Air Compressor Air End
2. 6 Years Parts – 3 Years Labor
   - Vanair® Super Capacitor™ (VSC™)
3. 3 Years Parts – 1 Year Labor
   - Reciprocating Compressor Air End
   - Generators
   - Welders
4. 2 Years Parts – 1 Year Labor
   - Hydraulic Motors
   - Hydraulic Pumps
5. 1 Year Parts – 1 Year Labor
   - All electronics including, but not limited to:
     - I) I/O Boards
     - II) Modules
     - III) Panel Boxes
     - IV) Instrumentation
   - Solenoids
   - Clutches
   - Running Gear/Trailers
   - Compressor/Hydraulic Coolers, including Fan and Radiator Core

This Limited Warranty shall not apply to:

1. Consumable components, such as shaft seals, valves, belts, filters, capacitors, contactors, relays, brushes or parts that fail due to normal wear and use.
2. Items furnished by Vanair®, but manufactured by others, such as engines and trade accessories
3. (these items are covered by the manufacturer's warranty, if any).
4. Equipment that has been modified by any party other than Vanair® or equipment which has not been used and maintained in accordance with Vanair's specifications.
5. Equipment which has been improperly installed and/or improperly operated, based upon Vanair's specifications for the equipment or industry standards.
6. Equipment installed by non-authorized or third party personnel. Vanair® products are intended for purchase and use by commercial/industrial users and persons trained and experienced in the use and maintenance of industrial equipment.

In the event of a warranty claim covered by this Limited Warranty, the exclusive remedies shall be, at Vanair's sole discretion: (i) repair; or (ii) replacement; (iii) where authorized in writing by Vanair® in appropriate cases, the reasonable cost of repair or replacement at an authorized Vanair® service facility ; or (iv) payment of (or credit for) the purchase price (less reasonable depreciation based upon actual use) upon return of the equipment at the warranty claimant's risk and expense. Vanair® will pay standard ground freight for any warranty item shipped to and from Vanair® or (Vanair® designated facility) within the first year of the applicable warranty period. Any additional expedited freight cost is the responsibility of the purchaser.

TO THE GREAT EXTENT PERMITTED BY APPLICABLE LAW, THE REMEDIES PROVIDED HEREIN ARE THE SOLE AND EXCLUSIVE REMEDIES APPLICABLE TO THE VANAIR® EQUIPMENT. IN NO EVENT SHALL VANAIR® BECOME LIABLE FOR DIRECT, INDIRECT, SPECIAL, PUNITIVE, INCIDENTAL OR CONSEQUENTIAL DAMAGES (INCLUDING LOSS OF PROFIT OR LOST BUSINESS OPPORTUNITY), WHETHER BASED ON CONTRACT, TORT OR ANY OTHER LEGAL THEORY. IN NO EVENT SHALL VANAIR® BECOME OBLIGATED TO PAY MORE ON ANY WARRANTY CLAIM THAN THE PURCHASE PRICE ACTUALLY PAID BY THE ORIGINAL RETAIL PURCHASER.

THIS LIMITED WARRANTY IS MADE IN LIEU OF ALL OTHER WARRANTIES, EXPRESS OR IMPLIED, INCLUDING THE WARRANTIES OF MERCHANTABILITY AND/OR FITNESS FOR A PARTICULAR PURPOSE, OR ANY OTHER WARRANTY OR GUARANTY ARISING BY OPERATION OF LAW. ANY WARRANTY NOT EXPRESSLY PROVIDED HEREIN, IMPLIED WARRANTY, GUARANTY AND ANY REPRESENTATION REGARDING THE PERFORMANCE OF THE EQUIPMENT, AND ANY REMEDY FOR BREACH OF CONTRACT, IN TORT, OR ANY OTHER LEGAL THEORY WHICH, BUT FOR THIS PROVISION, MIGHT ARISE BY IMPLICATION, OPERATION OF LAW, CUSTOM OF TRADE, OR COURSE OF DEALING ARE EXCLUDED AND DISCLAIMED BY VANAIR®.

Some states in the United States of America do not allow limitations of how long an implied warranty lasts, or the exclusion of incidental, indirect, special or consequential damages, and as such, the above limitations and exclusions may not apply to you. This warranty provides specific legal rights. Other rights may be available to you, but may vary from state to state.

In Canada, legislation in some provinces provides for certain additional warranties or remedies other than as stated herein, and to the extent that they may not be saved, the limitations and exclusions set out forth above may not apply. This Limited Warranty provides specific legal rights, and other rights may be available, but may vary from province to province.

(844) VAN - SERV

SERVICE@VANAIR.COM

PARTS@VANAIR.COM

10896 W. 300 N.

MICHIGAN CITY, IN 46360

(800) 526-8817

VANAIR.COM

EFFECTIVE: SEPTEMBER 9, 2022

VANAIR®

A Lincoln Electric Company

TABLE OF CONTENTS

WARRANTY ..... BEHIND COVER

TABLE OF CONTENTS ..... TOC - I

WARRANTY CLAIMS PROCEDURE ..... WARRANTY - I

CLAIMS PROCESS FOR WARRANTED PARTS ..... WARRANTY - I

PROCEDURE ..... WARRANTY - I

Figure W-1: Machine Serial Plate / Serial Number Location ..... WARRANTY - I

SECTION 1: ⚠ SAFETY ..... 1 - 1

1.1 ⚠ GENERAL INFORMATION ..... 1 - 1

1.2 ⚠ DANGERS, WARNINGS, CAUTIONS AND NOTES ..... 1 - 1

1.3 ⚠ SUMMARY OF DANGERS, WARNINGS AND CAUTIONS ..... 1 - 1

1.3.1 ⚠ DANGERS ..... 1 - 1

1.3.2 ⚠ WARNINGS ..... 1 - 1

1.3.3 ⚠ CAUTIONS ..... 1 - 3

1.4 ⚠ SAFETY DECALS ..... 1 - 3

1.5 ⚠ CALIFORNIA PROPOSITION 65 WARNINGS ..... 1 - 3

1.6 ⚠ UPFITTERS' OBLIGATIONS ..... 1 - 3

1.7 ♻ DISPOSING OF MACHINE FLUIDS ..... 1 - 4

SECTION 2: SPECIFICATIONS ..... 2 - 1

2.1 GENERAL INTRODUCTION ..... 2 - 1

TABLE 2A: SPECIFICATIONS FOR VIPER™ GASOLINE ROTARY SCREW COMPRESSOR ..... 2 - 1

Figure 2-1: Machine Main Component Locations ..... 2 - 2

TABLE 2B: STANDARD TORQUE VALUES ..... 2 - 3

SECTION 3: INSTALLATION ..... 3 - 1

3.1 MACHINE PACKAGE RECEIPT/INSPECTION ..... 3 - 1

Continued on next page...

SECTION 3: INSTALLATION (CONTINUED)

3.2 INSTALLATION INSTRUCTIONS ..... 3 - 1

Figure 3-1: Installation and Dimensions Diagram ..... 3 - 3

Figure 3-2: Installation and Dimensions Diagram, continued ..... 3 - 4

Figure 3-3: Installation and Dimensions Diagram - Optional Wheel Kit ..... 3 - 5

SECTION 4: OPERATION ..... 4 - 1

4.1 GENERAL INFORMATION ..... 4 - 1

4.2 INSTRUMENTATION ..... 4 - 1

4.2.1 IGNITION SWITCH ..... 4 - 1

4.2.2 ENGINE FAULT INDICATOR LAMP ..... 4 - 1

4.2.3 PRESSURE/TIMER ADJUSTMENT LEVER ..... 4 - 1

4.2.4 HOUR METER ..... 4 - 2

4.2.5 INFORMATION/DATA DISPLAY ..... 4 - 2

Figure 4-1: Instrumentation and Controls ..... 4 - 2

4.3 START-UP PROCEDURE ..... 4 - 2

4.4 PROGRAMMABLE PARAMETERS ..... 4 - 3

4.4.1 AUTO START/STOP ..... 4 - 3

4.4.2 COMPRESSOR PRESSURE ADJUSTMENT (OPERATING PRESSURE SELECTION) ..... 4 - 3

4.5 SHUTDOWN PROCEDURE ..... 4 - 3

4.6 MACHINE CONTROLLER LED STATUS CHART ..... 4 - 3

TABLE 4.6A - GREEN LED STATUS ..... 4 - 4

TABLE 4.6B - BLUE LED STATUS ..... 4 - 4

TABLE 4.6C - YELLOW LED STATUS ..... 4 - 4

TABLE 4.6D - RED LED STATUS ..... 4 - 4

TABLE 4.6E - LAMP COLOR INDICATIONS ..... 4 - 5

4.7 OPERATION GUIDELINES ..... 4 - 5

4.7.1 MACHINE ORIENTATION ..... 4 - 5

4.7.2 ENCLOSURE INTACT ..... 4 - 5

Continued on next page...

SECTION 4: OPERATION (CONTINUED)

4.7.3 ⚠ SAFETY/PROTECTIVE SHUTDOWN DEVICES ..... 4 - 5

4.7.4 COOLING SYSTEM ..... 4 - 5

4.7.5 LIFTING ..... 4 - 5

4.7.6 COLD WEATHER OPTION ..... 4 - 5

4.7.7 EXTREME CONDITIONS ..... 4 - 5

4.7.8 HIGH MOISTURE CONDITION: EMULSIFICATION OF OIL IN ROTARY SCREW COMPRESSOR SYSTEMS ..... 4 - 6

TABLE 4A - HIGH MOISTURE CONDITION OPERATION ..... 4 - 6

4.7.8.1 PREVENTION OF EMULSIFICATION ..... 4 - 6

4.7.8.2 INFREQUENT USE ..... 4 - 6

4.7.9 EXTREME CONDITION MACHINE APPLICATIONS ..... 4 - 7

SECTION 5: MAINTENANCE ..... 5 - 1

5.1 GENERAL INFORMATION ..... 5 - 1

5.2 ROUTINE MAINTENANCE SCHEDULE ..... 5 - 1

5.3 REPLACEMENT PARTS ..... 5 - 2

TABLE 5A: GAS VIPER™ GV3 - MAINTENANCE SCHEDULE AT A GLANCE ..... 5 - 3

TABLE 5B: SERVICE KIT CONTENT BREAKDOWN ..... 5 - 3

TABLE 5C: VIPER™ MAINTENANCE SCHEDULE INTERVALS ..... 5 - 4

TABLE 5D: ROUTINE MAINTENANCE REPLACEMENT KITS - COMPRESSOR ..... 5 - 4

5.4 PARTS REPLACEMENT AND ADJUSTMENT PROCEDURES ..... 5 - 17

5.4.1 ADJUSTING THE BELT TENSION ..... 5 - 17

5.4.1.1 CHANGING THE BELT ..... 5 - 17

5.4.1.2 ADJUSTING BELT TENSION ..... 5 - 17

5.5 SERVICING THE SYSTEM FUSES AND CIRCUIT BREAKER ..... 5 - 18

5.6 STORAGE AND INTERMITTENT USE ..... 5 - 18

5.6.1 INTERMITTENT USE ..... 5 - 18

5.6.2 LONG TERM STORAGE ..... 5 - 18

Continued on next page...

SECTION 6: TROUBLESHOOTING ..... 6 - 1

6.1 GENERAL INFORMATION ..... 6 - 1

Figure 6-1: Machine Serial Plate/Serial Number Location ..... 6 - 1

TABLE 6A: TROUBLESHOOTING GUIDE ..... 6 - 1

6.2 EXTREME CONDITION OPERATION ..... 6 - 3

6.2.1 HIGH MOISTURE CONDITION: EMULSIFICATION OF OIL IN ROTARY SCREW COMPRESSOR SYSTEMS ..... 6 - 4

6.2.2 COLD WEATHER OPERATION ..... 6 - 4

TABLE 6.2A - COLD WEATHER OPERATION ..... 6 - 4

6.2.3 HIGH TEMPERATURE OPERATION ..... 6 - 4

TABLE 6.2B - HIGH TEMPERATURE OPERATION ..... 6 - 5

6.2.4 HIGH DUST CONTENT OPERATION ..... 6 - 5

TABLE 6.2C - HIGH DUST CONTENT OPERATION ..... 6 - 5

6.2.5 HIGH ALTITUDE OPERATION ..... 6 - 5

SECTION 7: ILLUSTRATED PARTS LIST ..... 7 - 1

7.1 PARTS ORDERING INFORMATION ..... 7 - 1

Figure 7-1: Machine Serial Plate / Serial Number Location ..... 7 - 1

TABLE 7A: RECOMMENDED SPARE PARTS LIST ..... 7 - 2

7.2 COMPRESSOR AND PARTS - WITH TYPE-A AIR FILTER ..... 7 - 4

7.3 COMPRESSOR AND PARTS - WITH TYPE-B AIR FILTER ..... 7 - 6

7.4 ENGINE AND DRIVE PARTS ..... 7 - 8

7.5 FRAME AND DRIVE - 1 OF 4 ..... 7 - 10

7.5 FRAME AND DRIVE - 2 OF 4 ..... 7 - 12

7.5 FRAME AND DRIVE - 3 OF 4 ..... 7 - 14

7.5 FRAME AND DRIVE - 4 OF 4 ..... 7 - 16

7.6 CANOPY ASSEMBLY - 1 OF 3 ..... 7 - 18

7.6 CANOPY ASSEMBLY - 2 OF 3 ..... 7 - 20

7.6 CANOPY ASSEMBLY - 3 OF 3 ..... 7 - 22

7.7 COOLING SYSTEM ..... 7 - 24

7.8 ELECTRICAL SYSTEM ..... 7 - 26

Continued on next page...

SECTION 7: ILLUSTRATED PARTS LIST (CONTINUED)

7.9 ELECTRICAL SYSTEM - COLD WEATHER (OPTIONAL) ..... 7 - 28
7.10 FUEL TANK ASSEMBLY ..... 7 - 30
7.11 DECAL LOCATION/IDENTIFICATION - 1 OF 2 ..... 7 - 32
7.11 DECAL LOCATION/IDENTIFICATION - 2 OF 2 ..... 7 - 34
7.12 WIRING DIAGRAM - 1 OF 2 ..... 7 - 36
7.12 WIRING DIAGRAM - 2 OF 2 ..... 7 - 37
7.13 WIRING DIAGRAM - COLD WEATHER 12V (OPTIONAL) ..... 7 - 38
7.14 SCHEMATIC FLOW DIAGRAM VSE WITH INLET ..... 7 - 39
7.15 HOSE INSTALLATION GUIDE ..... 7 - 40
TABLE 7B: MAINTENANCE TRACKING LOG ..... 7 - 41

BLANK PAGE

WARRANTY CLAIMS PROCEDURE

CLAIMS PROCESS FOR WARRANTED VANAIR® PARTS

This process must be used by owners of Vanair® equipment in situations where a warranted item needs repair or replacement under the terms of the purchase warranty. Do not return items to Vanair® without prior authorization from the Vanair® Warranty Administrator.

PROCEDURE:

When a customer needs assistance in troubleshooting a system and/or returning parts, follow the steps below.

1. **Locate the machine's serial number:**

   The machine package serial number plate is located inside the machine compartment on the wall of the enclosure near the compressor unit (see ***Figure W-1***).

   The engine and the compressor also have individual serial numbers respectively (see ***Figure W-1***). For engine warranty issues, consult the Engine Operation Manual for the engine's limited warranty details. For particular compressor unit issues, the compressor serial number may be needed. In any case, engine and/or compressor issues can be confirmed using the machine serial number as found in ***Figure W-1***.

2. **Have a list of the symptoms/condition/ malfunctions along with any applicable temperature and pressure readings, and also the number of operational hours**

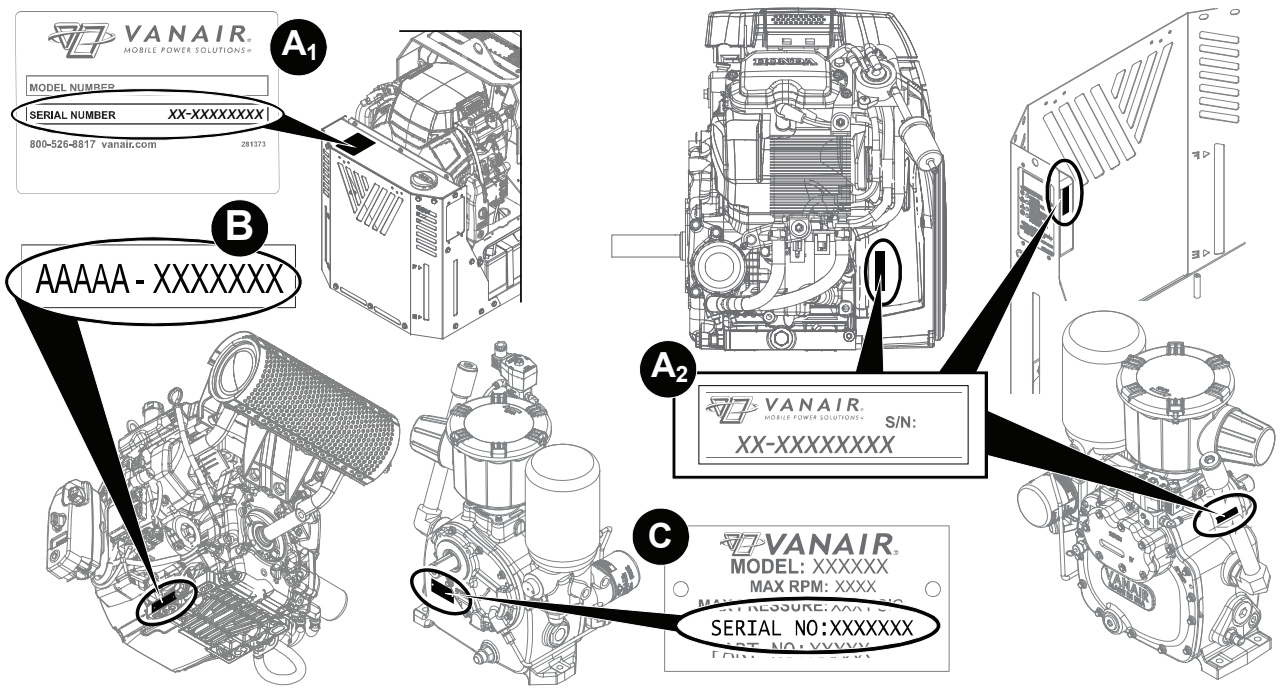

KEY	DESCRIPTION	KEY	DESCRIPTION
A_1	MACHINE SERIAL PLATE / SERIAL NUMBER	B	ENGINE SERIAL PLATE / SERIAL NUMBER (letters - numbers)
A_2	MACHINE SERIAL TAG / SERIAL NUMBER (X3)	C	COMPRESSOR SERIAL PLATE / SERIAL NUMBER

Figure W-1: Machine Serial Plate / Serial Number Location

available:

Note that the above information will also need to be included on the Return Material Authorization Form (per Step #6); this form is necessary for warranty processing if the warranty claim is deemed valid by the service case review.

3. **Contact the Vanair® Service Department by phone (1-844-VAN-SERV) to speak with a Service Technician.**
4. **Vanair® Service will troubleshoot the problem based on the information provided by the customer, and attempt to return the unit to service as quickly as possible.**
5. **If the unit cannot be returned to service, and Vanair® determines this matter is a warranty issue, the Service Technician will assign an RMA (Return Material Authorization) number that will provide for the return of the item to Vanair® for analysis and a final determination as to the item's warranty status.**

NOTE

The RMA number must be placed on the outside of the package being returned.

6. **Warranty Claims are solicited via a Return Material Authorization (RMA) Form. This form can be obtained via download from the web site, or requested directly from the Vanair® Service Department:**

   Once a current form has been obtained, follow the instructions given on the form to fill in the information needed. This form is used for the purpose of soliciting a warranty case. All of the field information except for the bottom section block fields, which includes Disposition of Goods, Notifications and Additional Notes, will be required.

   Customers have 30 days after the RMA number is issued to return the item. If the part is not returned within this period, the RMA is void and any claims will be denied.

NOTE

All labor claims or invoices must be approved by the Vanair® Warranty Administrator prior to starting repair work along with the cost of the repair. All paper work associated with the returned item and warranty repair cost must reference the RMA number issued against the part, and be forwarded to Vanair® within 30 days of the completion of work.

Before sending a warranty part to a customer, Vanair® will need a P.O. or credit card number to cover the cost of the part and shipping. After the part is analyzed and deemed to be covered under warranty, Vanair® will issue credit to the customer. All parts eligible for warranty must have the RMA number on the invoice at the time of purchase.

No items can be returned "freight collect". Freight costs will be addressed at the time the claim is closed. The customer pays any additional costs for warranty parts delivered through expedited services (i.e., Next Day, Second Day).

IMPORTANT

VANAIR® WILL NEVER ACCEPT ANY INVOICES FOR PARTS RETURNED: ANY PARTS RETURNED VIA INVOICE WILL BE RETURNED FREIGHT COLLECT: NO PARTS ARE TO BE RETURNED FREIGHT COLLECT!

Vanair® Mfg., Inc., a Lincoln Electric Company, strives to continuously improve its customer service. Please forward any questions, comments, or suggestions to Vanair® Service:

Service Toll Free: 1-844-VAN-SERV
1-844-826-7378

Service Direct: 1-219-879-5100, ext. 400

E-mail: service@vanair.com

SECTION 1: ⚠ SAFETY

1.1 ⚠ GENERAL INFORMATION

⚠ IMPORTANT

Read this manual before operating or servicing the Viper™ Gas compressor system. Failure to do so could result in damage equipment, bodily injury, or death.

The products provided by Vanair® Manufacturing, Inc., are designed and manufactured for safe operation and maintenance. But it is ultimately the responsibility of the users and maintainers for safe use of this equipment. Part of this responsibility is to read and be familiar with the contents of this manual before operation or performing maintenance actions.

⚠ DANGER

DO NOT OPERATE IN AN ENCLOSED SPACE.
Running any combustion engine in an enclosed space will result in Carbon Monoxide (CO) poisoning and may cause overheating, which may result in fire and/or explosion.
CO build-up can cause death!

Overheating can ignite surrounding materials resulting in fire and/or explosion which may cause injury, death and equipment damage.

IMPORTANT

An enclosed space refers to any area partially or fully enclosed by walls, a roof, or other boundaries.

These spaces can limit natural ventilation, restrict airflow, trap hazardous gases, and increase the risk of heat build-up, fire, or explosion.

It is the responsibility of the installation party to determine and mount Vanair® engine driven equipment in a way that ensures proper airflow and ventilation for safe operation. Failure to provide proper ventilation and clearances may result in hazardous conditions.

continued...

IMPORTANT (continued)

Vanair® assumes no responsibility or liability for installations it did not perform.

1.2 ⚠ DANGERS, WARNINGS, CAUTIONS AND NOTES

These boxes are labeled clearly with the title block listing either Danger, Warning, Caution, or other non-safety issue. They draw attention to specific issues that are pertinent to the safe and correct operation of the machine.

The symbols shown and defined in **Section 1: Safety** are used throughout this manual and on the machine to call attention to, and identify, possible hazards.

The international warning symbol [⚠] is used on all decals, labels and signs that concern information pertaining to bodily harm. When you see the international warning symbol, pay extremely careful attention, and follow the given instructions or indications to avoid any possible hazard.

1.3 ⚠ SUMMARY OF DANGERS, WARNINGS AND CAUTIONS

These boxed inserts are placed throughout this manual in the sections where they apply. This subsection is a general summary of their contents.

1.3.1 ⚠ DANGERS

- Keep tools or other conductive objects away from live electrical parts.
- Never touch electrical wires or components while the machine is operating. They can be sources of electrical shock.

1.3.2 ⚠ WARNINGS

- **DO NOT EVER** use this compressor as a breathing air source. Vanair® Manufacturing

Inc., disclaims any and all liabilities for damage or loss due to fatalities, personal injuries resulting from the use of a Vanair® compressor to supply breathing air.

- **DO NOT** perform any modifications to this equipment without prior factory approval.
- **DO NOT** install this compressor in a confined space that lacks proper ventilation and airflow; breathing and cooling air circulation must not be compromised.
- **DO NOT** operate the compressor or any of its systems if there is a known unsafe condition. Disable the equipment by disconnecting it from its power source. Install a lock-out tag to identify the equipment as inoperable to other personnel.
- **DO NOT** operate the compressor with any bypass or other safety systems disconnected or rendered inoperative.
- **DO NOT** operate the equipment while you are under the influence of alcohol or drugs.
- **DO NOT** operate the equipment while you are feeling ill.
- **DO NOT** attempt to service the equipment while it is operating.
- Before performing maintenance or replacing parts, relieve the entire system pressure by opening a service valve which will vent all pressure to the atmosphere: remove all electrical power.
- **DO NOT** use the compressor for purposes other than for which it is intended. High pressure air can cause serious and even fatal injuries.
- **DO NOT** operate the compressor outside of its specified pressure and speed ratings. (See **Section 2: Specifications** or refer to the equipment data plate.)
- **DO NOT** use flammable solvents or cleaners for cleaning the compressor or it parts.
- **DO NOT** operate the compressor in areas where flammable, toxic, or corrosive fumes, or other damaging substance can be ingested by the compressor intakes.
- Keep arms, hands, hair and other body parts, and clothing away from fans, drive shafts, and other moving parts.
- **DO NOT** wear jewelry, unbuttoned cuffs, ties, or loose-fitting clothing when you are working near moving/rotating parts.
- **ALWAYS** confine long hair when working near moving/rotating parts.
- **NEVER** operate the equipment while wearing a headset to listen to music or the radio.
- Wear personal protective equipment such as gloves, work shoes, and eye and hearing protection as required for the task at hand.
- **DO NOT** operate the compressor with any guards removed or damaged, or other safety devices inoperative.
- **DO NOT** operate the compressor in enclosed or confined spaces where ventilation is restricted or closed-off.
- Ensure that hoses connected to service valves are fitted with correctly sized and rated flow limiting devices which comply with applicable codes. Pressurized broken or disconnected hoses can whip causing injuries or damage.
- Over speed is hazardous! **NEVER** tamper with the governor components or settings to increase the maximum speed. Severe personal injury and equipment damage can result if operated at speeds above the maximum.
- **DO NOT** use tools, hoses, or equipment that have maximum ratings below that of this compressor.
- Keep metal tools, and other conductive objects away from live electrical components.
- Before performing maintenance or repair operations on the compressor, ensure that all power has been removed and been locked out to prevent accidental application.
- **DO NOT** assume that because the compressor is in a STOPPED condition that power has been removed.
- Use this compressor only to compress atmospheric air. Use of this equipment as a booster pump and/or to compress any other gaseous or aerosol substance constitutes improper use. It can also cause damage or injuries. Such misuse will also void the warranty.
- Install, operate, and maintain this equipment in full compliance with all applicable OSHA, oth-

er Federal, state, local codes, standards, and regulations.

- When lifting objects, be aware of proper lifting techniques to avoid injury.
- **ALWAYS** read and follow safety related precautions found on containers of hazardous substances.
- **DO NOT** play with compressed air. It can cause serious injury.

1.3.3 ⚠ CAUTIONS

- Check all safety devices for proper operation on a routine basis.
- Ensure that no tools, rags, or other objects are left on compressor drive systems or near intakes.
- Keep the equipment clean when performing maintenance or service actions. Cover openings to prevent contamination.
- **DO NOT** operate the compressor if cooling air is not available (fan/cooler not operating) or if lubricant levels are below their specified minimum levels.
- Ensure all plugs, hoses, connectors, covers, and other parts removed for maintenance actions are replaced before applying power to the compressor.
- Avoid touching hot surfaces and components.
- Ensure that electrical wiring, terminals; hoses and fittings are kept in serviceable condition through routine inspections and maintenance. Replace any damaged or worn components.
- **DO NOT** install safety devices and/or replacement parts other than authorized Vanair® replacement parts.
- Keep personnel out of line with, and away from discharge opening of valves, hoses and tools.
- Immediately clean up any lubricant or spills.

1.4 ⚠ SAFETY DECALS

Safety decals are placed onto, or located near, system components that can present a hazard to operators or service personnel. All pertinent decals listed in **Section 7.11, Decal Identification/ Location** are located near a component, which is subject to respect in terms of safety precautions. Always heed the information noted on the safety decals.

⚠ WARNING

DO NOT REMOVE OR COVER ANY SAFETY DECAL. Replace any safety decal that becomes damaged or illegible.

1.5 ⚠ CALIFORNIA PROPOSITION 65 WARNINGS

⚠ WARNING

Discharge from this machine may cause cancer and/or reproductive harm.

Proposition 65 requires businesses to provide warnings to Californians about significant exposures to chemicals that cause cancer, birth defects or other reproductive harm. Exposure to these chemicals may take place when products are acquired or used. Exposure may also occur in homes, workplaces, or other environments in California. By requiring that this information be provided, Proposition 65 enables Californians to make informed decisions about their exposures to these chemicals.

Proposition 65 also prohibits California businesses from knowingly discharging significant amounts of listed chemicals into sources of drinking water.

1.6 ⚠ UPFITTERS' OBLIGATIONS

Any modifications or additions made to a vehicle by an upfitter must adhere to all applicable Federal Motor Vehicle Safety Standards (FMVSS), and applicable state regulations to assure the altered vehicle remains safe and meets the same safety requirements as a standard manufactured vehicle.

If unsure about the compliance requirements for specific modifications, vehicle upfitters should consult with the National Highway Traffic Safety Administration (NHTSA) to understand their obligations. www.NHTSA.gov or 1-888-327-4236.

When mounting Vanair® engine-driven equipment the following guidelines must be followed to en-

sure safe operation and ventilation:

1. **Provide Adequate Ventilation:**
   - Ensure sufficient airflow openings for intake and exhaust to prevent CO build-up and overheating.
   - Use louvers, vents, or fans to facilitate proper air exchange.
2. **Exhaust Management:**
   - Route engine exhaust outside of the service body and away from any enclosed areas, vehicle occupants, or flammable materials.
   - Use properly rated exhaust piping and ensure there are no leaks.
   - Use properly rated heat shields and heat wrap.
3. **Temperature Control:**
   - Install heat shields or insulation where necessary to reduce heat transfer to nearby materials.
   - Avoid placing flammable items near equipment that generates heat.
4. **CO Detection:**
   - Install carbon monoxide detectors in areas where equipment is mounted to provide early warnings of hazardous gas build-up.
5. **Regular Inspection:**
   - Frequently inspect the mounting area for adequate ventilation, proper exhaust routing, and any signs of heat damage or gas leaks.

It is the responsibility of the installation party to determine and mount Vanair® engine-driven equipment in a manner that ensures adequate airflow and ventilation for safe operation. Failure to provide proper ventilation may result in hazardous conditions.

⚠ DANGER

DO NOT OPERATE IN AN ENCLOSED SPACE.
Running any combustion engine in an enclosed space will result in Carbon Monoxide (CO) poisoning and may cause overheating, which may result in fire and/or explosion.
CO build-up can cause death!

Overheating can ignite surrounding materials resulting in fire and/or explosion which may cause injury, death and equipment damage.

IMPORTANT

An enclosed space refers to any area partially or fully enclosed by walls, a roof, or other boundaries.

These spaces can limit natural ventilation, restrict airflow, trap hazardous gases, and increase the risk of heat build-up, fire, or explosion.

It is the responsibility of the installation party to determine and mount Vanair® engine driven equipment in a way that ensures proper airflow and ventilation for safe operation. Failure to provide proper ventilation and clearances may result in hazardous conditions.

Vanair® assumes no responsibility or liability for installations it did not perform.

1.7 DISPOSING OF MACHINE FLUIDS

Always dispose of machine fluids under the guidance of all applicable local, regional and/or federal law.

Vanair® encourages recycling when allowed. For additional information, consult the container label of the fluid in question.

SECTION 2: SPECIFICATIONS

2.1 GENERAL INTRODUCTION

The tables and figures in this section list the specifications (including operational, output and dimensional) of the overall machine. Contact the Vanair® Service Department if additional specifications are needed that cannot be found in this manual.

Refer to ***Figure 2-1*** for general machine component locations. For additional information, including measurement specifications, refer to ***Figure 3-1*** (machine and identification and dimensions) in **Section 3, Installation**.

TABLE 2A: SPECIFICATIONS FOR VIPER™ GASOLINE ROTARY SCREW COMPRESSOR

GENERAL SYSTEM INFORMATION	SPECIFICATION	
ENGINE:	**24.9 HP (18.6 Kw) @ 3600 RMP (SAE J1349)**	
Engine Speed:	Idle Speed: 1400 RPM Unloaded, to 2500 to 3600 RPM Loaded	
Engine Oil Capacity:	1.9 Quarts	
Fuel Consumption:	Two (2) GPH at Full Engine Speed / Load	
Fuel Tank Capacity:	Eleven (11) Gallons	
Fuel Type:	Gasoline [I]	
Operating Temperature Limits:	+10°F (-7°C) to 120°F (49°C) [II]	
COMPRESSOR:	**Single Stage, Oil Injected Rotary Screw**	**Altitude Rating**
Model:	80 CFM / 100 PSIG	2,000 ft
	70 CFM / 125 PSIG	4,000 ft
	60 CFM / 150 PSIG	10,000 ft
	55 CFM / 175 PSIG	11,000 ft
Inlet Control:	12VDC	
Air Filter:	Pleated Paper, Dry Type	
Oil Filter:	Spin-on Style	
Oil Capacity / Type:	Air End - **1.9 Gallons** Compressor and Cooler Total Capacity / Vanguard™ Premium Synthetic Oil	
Safety Relief Valve Setting:	200 PSIG	
Electrical System:	12 VDC	
Cooling System:	Air to Oil Heat Exchanger	
Instrumentation Display:	Run Hours, Compressor Temperature, Discharge Pressure, Engine Temperature	

[I] For specification and requirements regarding the Honda Gasoline Engine, refer to the Engine Operation Manual.

[II] With cold weather option kit temperature range expands to: -40 °F (-40 °C). Order cold weather option kit **no. 032983.**

NOTE: Refer to ***Figure 2-1*** for main component locations.

NOTE: Specifications are subject to change without notice.

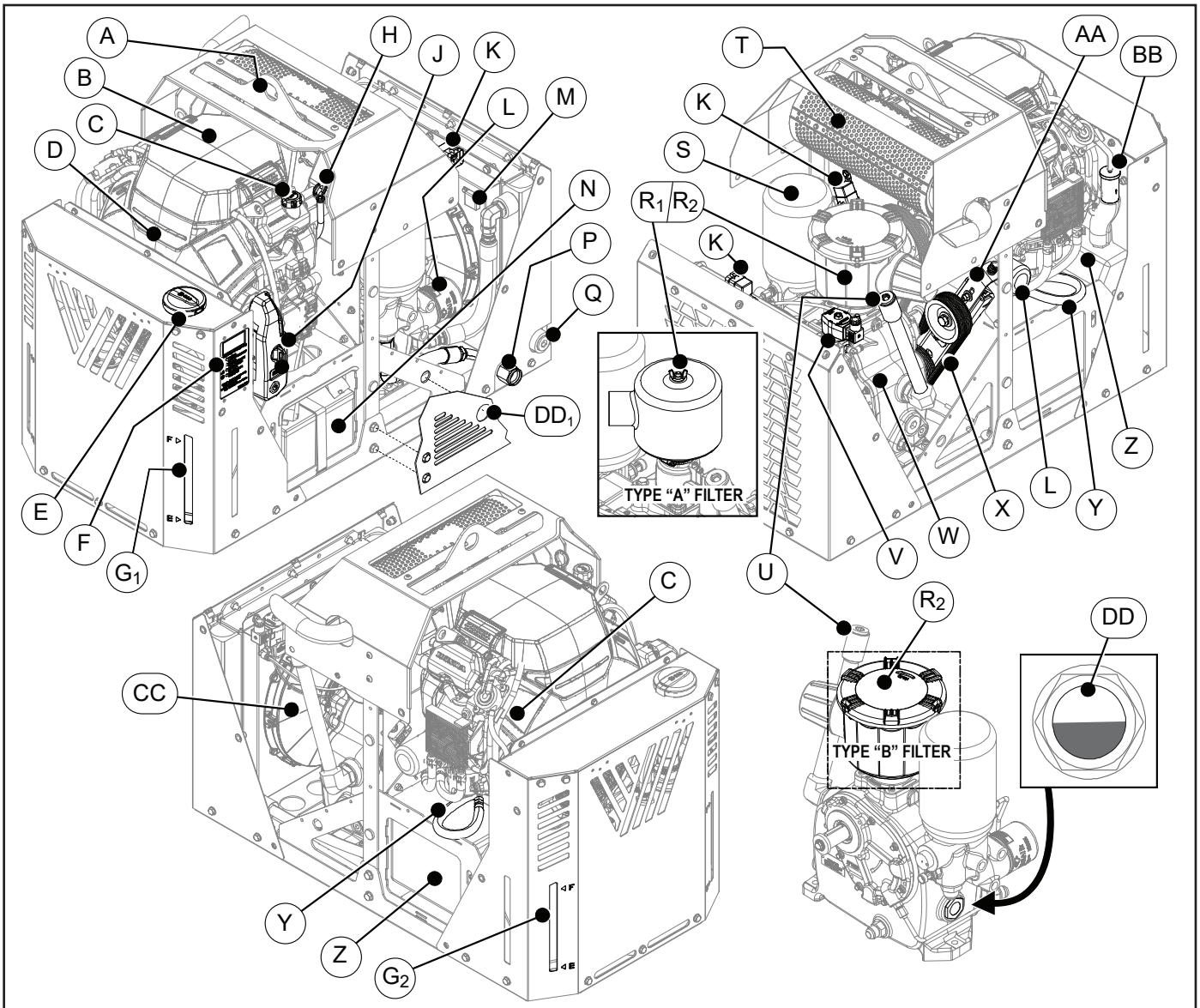

KEY	DESCRIPTION	KEY	DESCRIPTION	KEY	DESCRIPTION
A	LIFTING BAIL	L	COMPRESSOR OIL FILTER ELEMENT	W	COMPRESSOR UNIT
B	ENGINE AIR FILTER HOUSING	M	30A FUSE	X	BELT DRIVE ASSEMBLY
C	ENGINE OIL FILL PORT/CAP	N	BATTERY	Y	ENGINE OIL DRAIN TUBE
D	ENGINE [I]	P	SERVICE AIR OUTLET	Z	FUEL TANK
E	FUEL FILL PORT/CAP	Q	COMPRESSOR OIL DRAIN PORT	AA	TENSION ASSEMBLY
F	INSTRUMENT PANEL	R_1	COMPRESSOR AIR FILTER ASSEMBLY - TYPE-A	BB	ENGINE FUEL FILTER
G_1	FUEL LEVEL GAUGE (FRONT)	R_2	COMPRESSOR AIR FILTER ASSEMBLY - TYPE-B	CC	COOLING FAN ASSEMBLY
G_2	FUEL LEVEL GAUGE (BACK)	S	COMPRESSOR SEPARATOR ELEMENT	DD	COMPRESSOR OIL LEVEL GAUGE / SIGHT GLASS: **DD_1** shows outside panel visual access location of the glass.
H	ENGINE OIL LEVEL DIPSTICK/GAUGE	T	MUFFLER		
J	IGNITION/ CONTROL PANEL	U	COMPRESSOR OIL FILL TUBE	[I] For information and specifications on the engine, consult the Engine Operation Manual.	
K	NO/NC WEATHERPROOF RELAY WITH RESISTOR	V	SOLENOID VALVE (solenoid valve will differ between Type-A and Type-B air filter usage)		

Figure 2-1: Machine Main Component Locations

TABLE 2B: STANDARD TORQUE VALUES

SIZE	GRADE	LUBRICATED
1/4 - 20 UNC	5	6 ft-lbs
5/16 - 18 UNC	5	13 ft-lbs
3/8 - 16 UNC	5	23 ft-lbs
1/2 - 13 UNC	5	55 ft-lbs
3/4 - 10 UNC	5	200 ft-lbs

BLANK PAGE

SECTION 3: INSTALLATION

3.1 MACHINE PACKAGE RECEIPT/INSPECTION

Upon receipt of the machine package, inspect the exterior of the shipping crate for signs of shipping/transit damage. Any damage should be reported immediately to the shipping company. Open the lid and inspect the component parts and supports to ensure that there has been no internal movements of assemblies or components which may have caused damage. To install the Viper™ Gas Compressor System, refer to the following sections.

To report missing items, incorrect part numbers, or other discrepancies, contact Vanair® at:

Vanair® Manufacturing, Inc.
A Lincoln Electric Company
10896 West 300 North
Michigan City, IN 46360
Telephone: (800) 526-8817
Service: (844) VAN-SERV
service@vanair.com
sales@vanair.com
vanair.com

3.2 INSTALLATION INSTRUCTIONS

⚠ DANGER

DO NOT OPERATE IN AN ENCLOSED SPACE.
Running any combustion engine in an enclosed space will result in Carbon Monoxide (CO) poisoning and may cause overheating, which may result in fire and/or explosion.
CO build-up can cause death!

Overheating can ignite surrounding materials resulting in fire and/or explosion which may cause injury, death and equipment damage.

IMPORTANT

An enclosed space refers to any area partially or fully enclosed by walls, a roof, or other boundaries.

These spaces can limit natural ventilation, restrict airflow, trap hazardous gases, and increase the risk of heat build-up, fire, or explosion.

It is the responsibility of the installation party to determine and mount Vanair® engine driven equipment in a way that ensures proper airflow and ventilation for safe operation. Failure to provide proper ventilation and clearances may result in hazardous conditions.

Vanair® assumes no responsibility or liability for installations it did not perform.

⚠ WARNING

ELECTRICAL HAZARD! Be sure the battery is disconnected before starting the installation.

IMPORTANT

DO NOT install in an enclosed space. 2500 CFM of fresh air is required for cooling; ensure there is no recirculation of hot air from the machine returning to the cool air intakes.

NOTE

In order to prevent accidental damage to vehicle components (fuel tanks, lines, brake lines, wiring harnesses), note their location before drilling any holes.

Refer to ***Figure 3-1***, and the following procedure:

1. Position the machine so that there is no restriction of cooling air through the enclosure. A minimum of six (6) inches from front access side; minimum of ten (10) inches from rear side, and six (6) inches from the left side. Cooling air enters the enclosure through the rear panel, passes through the cooler, and exits through vents in the front and left sides.

NOTE: Air circulation from hot air exhaust must be prevented from heating cooling air circulation.

2. Ensure that adequate height and clearance exists to allow for the hood to open (minimum of 46.5 inches from mounting surface), and a clear passage for service allowance to the maintenance access panel located at the front and back.
3. Mounting surface or support should be adequate for the weight of the machine and should be level for normal operation. Mounting holes for four (4) 1/2” hold down bolts (as provided in optional kit **no. KIT1202-001**) are provided. Refer to **Section 7, Illustrations and Parts Lists** for additional installation and system schematic drawings.
4. Electrical connections (system designed for 12VDC negative ground).

Ensure all supply hoses and electrical wiring are correctly specified, adequately supported and do not touch or rest on any sharp edges. Wiring should be protected with split loom to prevent corrosion.

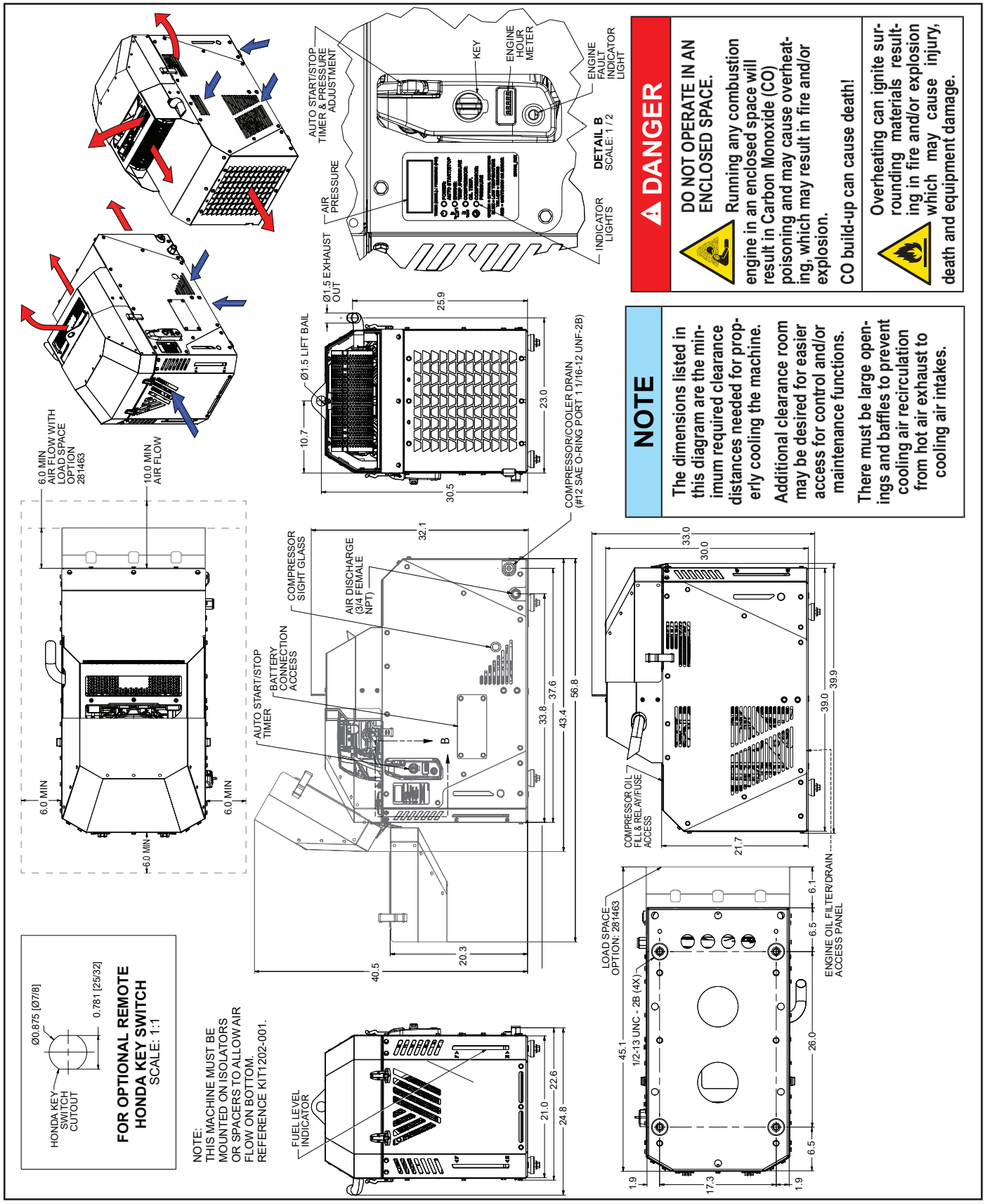

Figure 3-1: Installation and Dimensions Diagram

283093ID_r3_1

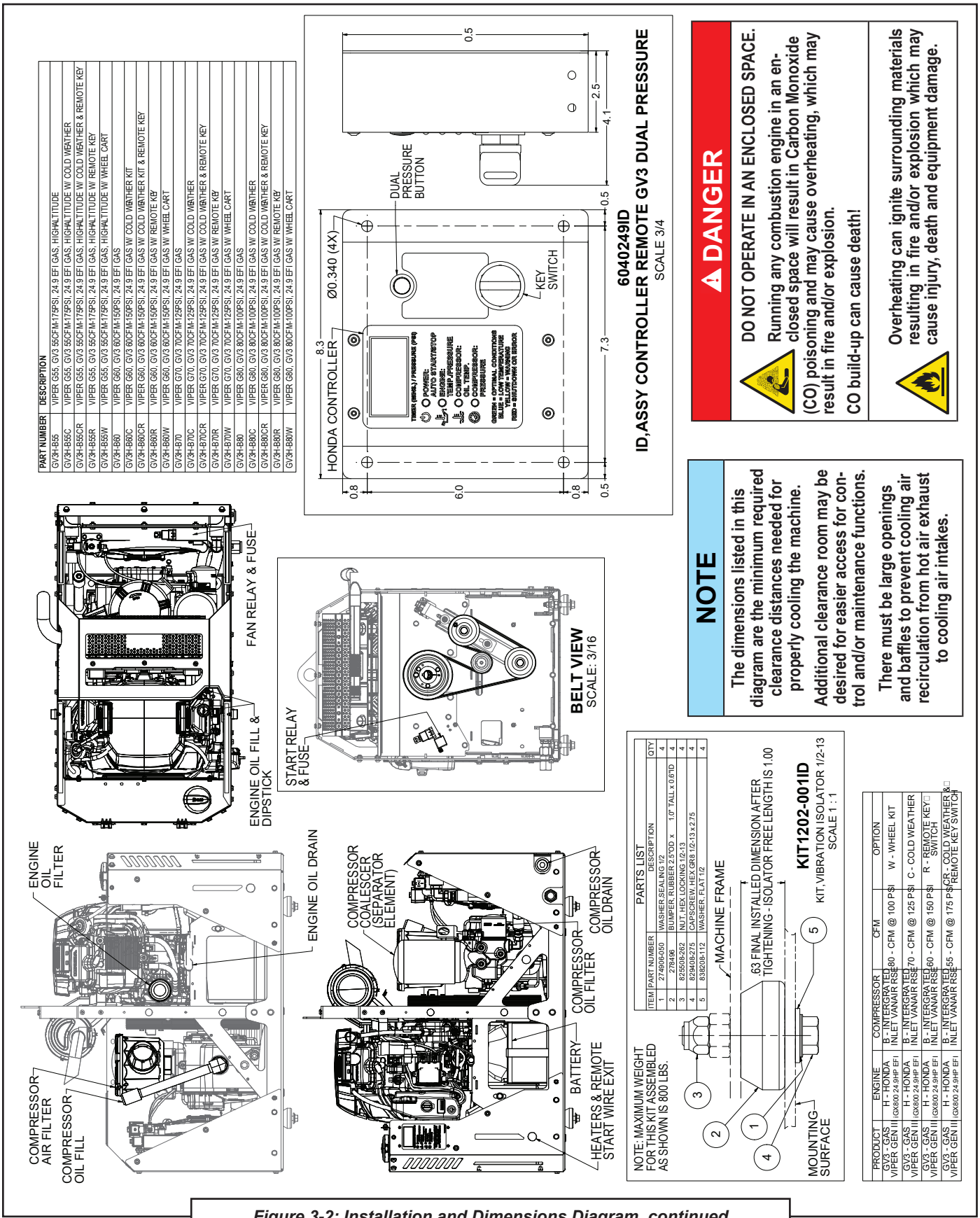

Figure 3-2: Installation and Dimensions Diagram, continued

283093ID_r3_2

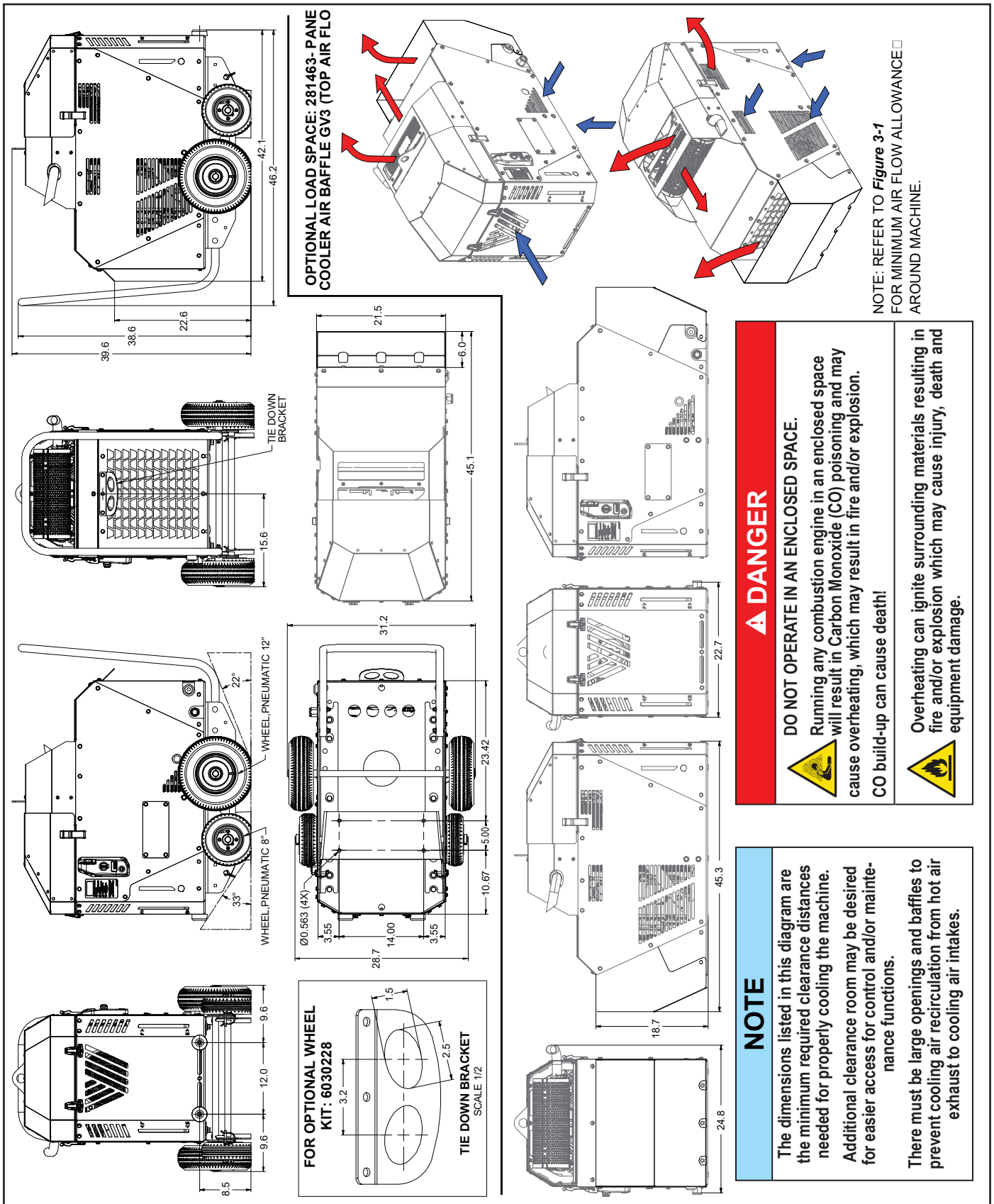

Figure 3-3: Installation and Dimensions Diagram - Optional Wheel Kit

283093ID_r3_3

BLANK PAGE

SECTION 4: OPERATION

4.1 GENERAL INFORMATION

The Vanair® Viper™ Gas compressor allows the user to engage variable control settings for machine operation. The goal of variable control setting is to allow the control factors of 1) machine pressure set-points, 2) timing input, 3) engine RPM, and 4) compressor inlet valve modulation to gain consistent matching between air output and demand.

Once parameters are set controls are automatic and require no user interface. The engine is electronically fuel-injected for easy starting, especially in cold weather. There is no choke involved in starting the machine; the user starts the engine, and the compressor will regulate the engine speed (either full speed or idle) based on compressed air demand.

⚠ DANGER

DO NOT OPERATE IN AN ENCLOSED SPACE.
Running any combustion engine in an enclosed space will result in Carbon Monoxide (CO) poisoning and may cause overheating, which may result in fire and/or explosion.
CO build-up can cause death!

Overheating can ignite surrounding materials resulting in fire and/or explosion which may cause injury, death and equipment damage.

IMPORTANT

An enclosed space refers to any area partially or fully enclosed by walls, a roof, or other boundaries.

These spaces can limit natural ventilation, restrict airflow, trap hazardous gases, and increase the risk of heat build-up, fire, or explosion.

Continued...

IMPORTANT (continued)

It is the responsibility of the installation party to determine and mount Vanair® engine driven equipment in a way that ensures proper airflow and ventilation for safe operation. Failure to provide proper ventilation and clearances may result in hazardous conditions.

Vanair® assumes no responsibility or liability for installations it did not perform.

IMPORTANT

Before starting the Vanair® Viper™ Gas compressor, read this section thoroughly and familiarize yourself with the controls and indicators - their purpose, location and use.

NOTE

If start-up and shut-down procedures are not followed, damage to the system and its components may occur.

4.2 INSTRUMENTATION

Refer to ***Figure 4-1***. The instrument panel will provide the operator with feedback on operating pressure, temperature and run time hours.

4.2.1 IGNITION SWITCH

The keyed ignition switch is used to start and stop the compressor. It has three positions: OFF, ON and START.

4.2.2 ENGINE FAULT INDICATOR LAMP

When lit indicates when an engine fault is at hand.

4.2.3 PRESSURE/TIMER ADJUSTMENT LEVER

This lever adjusts both the pressure operating range setting from 75 up to 175 PSI, and also sets the amount of time the compressor inlet must be

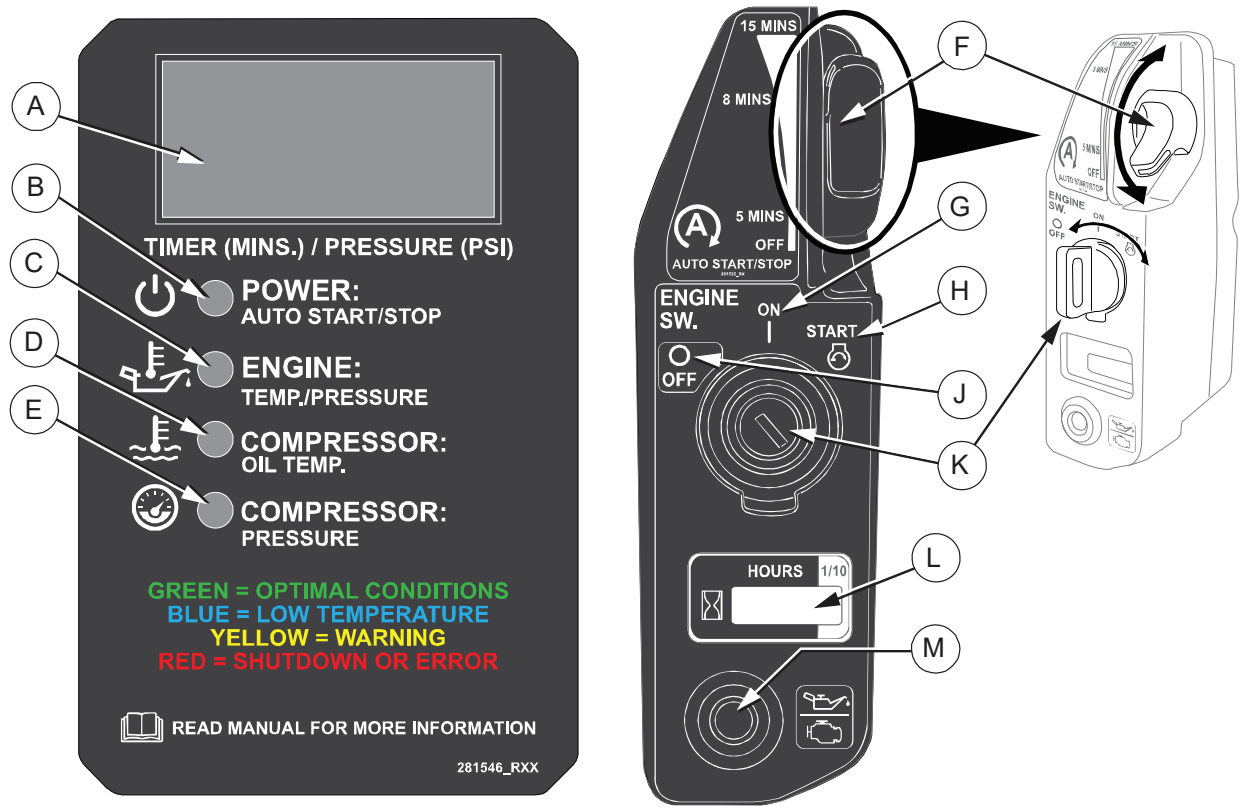

KEY	DESCRIPTION	KEY	DESCRIPTION
A	INFORMATION/DATA DISPLAY	G	IGNITION: ON POSITION
B	POWER AUTO START/STOP STATUS LAMP	H	IGNITION: START POSITION
C	ENGINE TEMP/PRESSURE STATUS LAMP	J	IGNITION OFF POSITION
D	COMPRESSOR OIL TEMPERATURE STATUS LAMP	K	KEY IGNITION SWITCH
E	COMPRESSOR PRESSURE STATUS LAMP	L	HOUR METER DIGITAL DISPLAY
F	PRESSURE/TIMER ADJUSTMENT LEVER	M	ENGINE FAULT INDICATOR LAMP

Figure 4-1: Instrumentation and Controls

closed before the machine enters sleep state. It is also used to turn the Auto Start/Stop function off.

4.2.4 HOUR METER

The Viper™ Gas is equipped with an hour meter to accurately log run time hours so that machine operation and service intervals can adhere to the maintenance schedule.

4.2.5 INFORMATION/DATA DISPLAY

This panel contains a digital pressure display screen along with five state of control indication lamps for the following indications:

- Power: Auto Start/Stop
- Engine: Temp/Pressure
- Compressor: Oil Temp.
- Compressor: Pressure

Each indication above is gauged with an LED light that changes color in real time with the evolving state of its condition. Refer to ***Figure 4-1*** for information on lamp color relationships.

4.3 START-UP PROCEDURE

The following procedure should be used to make the initial start-up of the compressor.

1. Position the compressor on a level surface so that proper amounts of liquid can be added, if required.
2. Check engine and compressor oil levels and add oil, if necessary.
3. Fill fuel tank.
4. Connect air hose/piping to discharge.
5. Close service valve.
6. Start the engine using the key switch.
7. Allow engine to warm up for a few moments until the engine idles smoothly.

IMPORTANT

In conditions where environment has a high moisture content (humidity, etc.), a precaution should be taken in regard to operating the compressor. Refer to *Section 4.7.8* before starting the machine in such conditions.

4.4 PROGRAMMABLE PARAMETERS

The Viper™ Gas control system allows the user to edit (set and/or change) the value(s) of operating inputs such as pressure set points and timer function increments.

4.4.1 AUTO START/STOP

When the Auto Start/Stop operating mode is enabled, the compressor package will turn off until air demand is needed again. Auto Shutdown (If enabled) will cause *Machine Sleep State*. When the inlet control output is not active, a timer that will count up to the Auto Shutdown Parameter value. Engine will shut down when the timer value is reached.

Refer to ***Figure 4-1***. To set the time increment:

1. With the machine off, turn the key to the “ON” position (do not Crank/Start).
2. The screen will display "A" followed by the number of minutes that Auto Stop will occur ("A 0" = Auto Start/Stop OFF). Auto Stop time is now adjustable using the adjustment lever **[H]**.
3. Set time will automatically appear after three seconds (three consecutive dots appear on screen).

4.4.2 COMPRESSOR PRESSURE ADJUSTMENT (OPERATING PRESSURE SELECTION)

The compressor pressure adjustment parameter can be edited using the auto start/stop lever while the machine is running.

This parameter adjusts compressor cut-out pressure from 75 PSI (minimum pressure setting) to the maximum system pressure (maximum pressure setting) in increments of five (5) PSI.

1. With the machine running or in sleep mode move the adjustment lever **[H]** quickly to the top position, then to the bottom position again.
2. "SET" will appear on the screen and flash the current set point.
3. The pressure may now be adjusted (in 5 PSI increments): Move the adjustment lever **[H]** to the desired pressure. Let go of the lever once the desired pressure is shown.
4. The new setting will automatically apply after three (3) seconds.
5. Use the pressure/timer adjustment lever **[H]** along with the information/data screen **[A]** readout to set the pressure.

4.5 SHUTDOWN PROCEDURE

1. Close service valve slowly to stop the demand for compressed air.
2. Allow engine to run at idle for a few minutes to cool down.
3. Turn the key switch to the OFF position.

4.6 MACHINE CONTROLLER LED STATUS CHART

The controller on the Viper™ GV3 will indicate with the LED’s the status of:

- Engine: Oil Temperature & Pressure
- Compressor: Oil Temperature & Pressure

Refer to ***Figure 4-1*** and **Table 4.6A** through **Table 4.6E** for controller LED status descriptions.

Continued on page 4 - 5...

TABLE 4.6A - GREEN LED STATUS

LAMP	Light Description	Green LED solid	Green LED blink slow	Green LED blink fast
O	Power - Auto Start/Stop	Engine Running	Power but not running	1min prior to sleep
O	ENGINE TEMP/PRESS	110F-230°F		
O	COMPRESSOR TEMPERATURE	170F-230°F		
O	COMPRESSOR PRESSURE (100 PSI)	70-110 PSI	Pressure Setpoint Adjust Mode	
	COMPRESSOR PRESSURE (125 PSI)	70-135 PSI	^^	
	COMPRESSOR PRESSURE (150 PSI)	70-160 PSI	^^	
	COMPRESSOR PRESSURE (175 PSI)	70-185 PSI	^^	

TABLE 4.6B - BLUE LED STATUS

LAMP	Light Description	Blue LED solid	Blue LED blink slow
O	Power - Auto Start/Stop	Sleep state	Waiting for blowdown
O	ENGINE TEMP/PRESS	40-109°F	<0-39°F, low speed no auto stop
O	COMPRESSOR TEMPERATURE	60-169°F	<60°F, no inlet output

TABLE 4.6C - YELLOW LED STATUS

LAMP	Light Description	Yellow LED solid	Yellow blink Slow	Yellow LED blink fast
O	Power - Auto Start/Stop			3 sec prior to start, sound horn
O	ENGINE TEMP/PRESS	261°F-270°F		
O	COMPRESSOR TEMPERATURE		231F-244F	
O	COMPRESSOR PRESSURE (100 PSI Setpoint)	0-69 PSI	111-130 PSI	
	COMPRESSOR PRESSURE (125 PSI Setpoint)	0-69 PSI	136-160 PSI	
	COMPRESSOR PRESSURE (150 PSI Setpoint)	0-69 PSI	161-180 PSI	
	COMPRESSOR PRESSURE (175 PSI Setpoint)	0-69 PSI	186-194 PSI	

TABLE 4.6D - RED LED STATUS

LAMP	Light Description	Red LED Solid	RED LED blink slow	RED LED blink Fast
O	Power - Auto Start/Stop	Error	Any shutdown	Low voltage
O	ENGINE TEMP/PRESS	>270°F	Eng oil press shut-down	
O	COMPRESSOR TEMPERATURE		>245° = Shutdown	Sensor error, do not run/start
O	COMPRESSOR PRESSURE (100 PSI Setpoint)	>130 PSI = Shutdown	Sensor error, do not run/start	
	COMPRESSOR PRESSURE (125 PSI Setpoint)	>155 PSI = Shutdown	Sensor error, do not run/start	
	COMPRESSOR PRESSURE (150 PSI Setpoint)	>175 PSI = Shutdown	Sensor error, do not run/start	
	COMPRESSOR PRESSURE (175 PSI Setpoint)	>195 PSI = Shutdown	Sensor error, do not run/start	

Continued from page 4 - 3...

TABLE 4.6E - LAMP COLOR INDICATIONS	
COLOR OF LAMP	MACHINE STATUS/CONDITION INDICATED
BLUE	LOW TEMPERATURE
GREEN	OPTIMAL CONDITIONS
YELLOW	WARNING
RED	SHUTDOWN OR ERROR

4.7 OPERATION GUIDELINES

4.7.1 MACHINE ORIENTATION

The Viper™ Gas Compressor should only be operated on a level surface. Operation in a non-level orientation could result in improper fuel system venting, oil carryover in the compressed air supply, and/or vibrational issues.

4.7.2 ENCLOSURE INTACT

The Viper™ Gas Compressor should only be operated with the hood closed, and the front and back access covers in place. The cooling system is designed to function properly only with the enclosure intact and closed.

4.7.3 ⚠ SAFETY/PROTECTIVE SHUTDOWN DEVICES

- **Compressor Over Pressure -** The pressure gauge on the instrument panel is equipped with a settable shutdown switch. It is extremely important to keep the pressure gauge in good operating condition and the shutdown point set properly. If the gauge should ever malfunction it is imperative to replace it to protect the equipment as well as for personnel safety.
- **Compressor Over Temperature -** The temperature gauge on the instrument panel is equipped with a settable shutdown switch. It is extremely important to keep the temperature gauge in good operating condition and the shutdown point set properly. If the gauge should ever malfunction it is imperative to replace it to protect the equipment as well as for personnel safety.
- **Engine Oil Pressure -**The engine is equipped with an oil pressure monitor that will shut down the engine if a minimum pressure is not maintained. No user interface is required.
- **Engine Over Temperature -** The engine is equipped with an oil temperature monitor that will shut down the engine if the maximum oil temperature is exceeded. No user interface is required.

4.7.4 COOLING SYSTEM

The Viper™ Gas cooling system consists of an integral engine cooling fan for air/air engine, and air/oil cooler cooling and a compressor cooler and fan for air/oil cooling of the compressor fluid. Follow the guidelines for recommended air space allowance around the machine to avoid preheating the intake air and/or recirculating of exhaust air back to the intake openings. Intake openings and the compressor cooler need to be free of obstructions, dirt, buildup, etc. to keep from reducing the efficiency of the cooling system.

4.7.5 LIFTING

The Viper™ Gas is equipped with a single point lifting device. The lifting device is sufficient for supporting the weight of the machine ONLY. The lifting device is designed to support the weight of the machine in a vertical direction ONLY. Moving the machine in a horizontal direction resulting in a swinging motion should be prohibited and could cause the lifting device to fail resulting in damage to the equipment and pose a significant safety hazard to personnel.

4.7.6 COLD WEATHER OPTION

Consult ***Section 6.2.2*** for cold weather operation information.

4.7.7 EXTREME CONDITIONS

When operating in the presence of high humidity, in extreme cold or hot conditions, or at a high altitude, extra attention should be given to any indication that could lead to a serious problem. Preventative safeguards exist that can minimize the possibility of malfunctions that are prone to occur under certain ambient conditions. Refer to **Section 6.2, Extreme Condition Operation**, for additional information on variable ambient operating conditions, and adjustment adaptations that

TABLE 4A: HIGH MOISTURE CONDITION OPERATION		
Symptom	**Cause**	**Prevention / Corrective Action**
Emulsification of oil in compressor system: • Compressor oil is milky white in color • Compressor oil is broken down and lacks lubricity. • Compressor oil may develop solid chunks or clumps	**Operating the compressor system for short periods of time:** • Short cycling prevents the temperature of the oil from attaining a high enough temperature capable of vaporizing the moisture droplets. **Operating the compressor system unloaded without air flow from the service line for long periods of time:** • This can keep the oil temperature from getting hot enough to vaporize the moisture droplets, preventing the moisture from being able to escape the system. Additionally, there is no path for the moisture to escape the system. **The air filter is saturated with water:** • This forces moisture to be ingested by the compressor. **Any of the above causes will be exacerbated in especially humid environments.**	**RECOMMENDED CHANGES:** If the problem is not corrected by standard operating practices and regular preventative maintenance, consider the following: • Raise the average temperature of the compressor oil. • Change the operating procedure to allow for the compressor oil temperature to reach 180°F before discharging any air. If the compressor isn't discharging any air, it's not ingesting any potentially humid air. It will build pressure upon initial startup, but then it will run closed and allow it to heat up. **REPAIR/MAINTENANCE:** Refer to **Section 5** of the Operation Manual for inspection, cleaning, and repair instructions. 1. Once the compressor oil becomes emulsified, it must be replaced along with the oil filter. Depending on the severity, other parts might also need to be replaced. 2. Check that the separator element is in good, working condition. 3. Check that the scavenge line is working properly. If the system is badly contaminated, Vanair® recommends a lube flush that will help clean out any remaining contamination throughout the system. Consult Vanair® Service Department for lube flush instructions. Check the moisture drain frequently on the air tank reservoir, to alleviate moisture build-up.

can be made accordingly.

4.7.8 HIGH MOISTURE CONDITION: EMULSIFICATION OF OIL IN ROTARY SCREW COMPRESSOR SYSTEMS

A serious condition may occur in operating environments that contain high levels of moisture, whereby condensation can occur within the oil system, and possibly lead to emulsification of the lubricant. Emulsification occurs when the system's oil absorbs moisture present in the operation system via condensation.

If the condition persists, consider changing to a different type of lubricant (consult supplier).

Consult the information in **Table 4A**, and follow the instructions given in **Section 4.7.8.1** for preventative and corrective actions necessary to take for high moisture ambient environment operation. See also **Section 6.3.1** in the Troubleshooting Section.

4.7.8.1 PREVENTION OF EMULSIFICATION

1. Start the machine normally.
2. Do not immediately engage service air when full load is reached; allow the system to first warm up to180°F. This warm-up period allows the moisture within the system to vaporize.
3. After temperature reaches 180°F, open service valve and discharge air for approximately ten (10) minutes to purge the system of moisture vapor.

4.7.8.2 INFREQUENT USE

In some installations the compressor may not be regularly used. In order to ensure the compressor system is maintained in working order, the compressor should be started and run at least once per month. Follow the procedure outlined in **Section 4.7.8.1** on a once per month basis.

Be sure to follow all fluid and filter maintenance as outlined in this manual following the recommended change intervals. In cases whereby the machine is scheduled to be idle for long periods of time, consult **Section 5.6, Storage and Intermittent Use** for long idle preparation.

4.7.9 EXTREME CONDITION MACHINE APPLICATIONS

When operating in extreme hot or cold conditions, extra attention should be given to any indications that could lead to a serious problem. Machine review and maintenance check schedules should be more frequent than the normal suggestions given in **Section 5**, **Tables 5A** and **5B** (Routine Maintenance Schedules for Engine and Compressor, respectively).

For additional information concerning extreme operating conditions and steps to take to optimize machine performance, refer to **Section 6.2, Extreme Condition Operation**, in **Section 6, Troubleshooting**.

BLANK PAGE

SECTION 5: MAINTENANCE

5.1 GENERAL INFORMATION

A strict maintenance program is the key to long life for the Viper™ Gas. Below is a program that, when adhered to, should keep the package in top operating condition. Refer to **Section 5.4, Parts Replacement and Adjustment Procedures** in this section of the manual for detailed descriptions of specific compressor system components. The following table lists the main topics in order of appearance for this section:

⚠ DANGER

Disconnect the battery before performing any non-routine maintenance functions on the Viper™ Gas.

⚠ WARNING

Follow all applicable safety recommendations as outlined in Section 1: Safety of this manual.

⚠ WARNING

DO NOT remove caps, plugs and/or other components when compressor is running or pressurized. Stop compressor and de-pressurize system prior to maintenance of system.

Wear personal protective equipment such as gloves, work boots, and eye and hearing protection as required for the task at hand.

5.2 ROUTINE MAINTENANCE SCHEDULE

IMPORTANT

Follow and perform the prescribed routine maintenance schedule at the recommended intervals.

(continued)...

IMPORTANT (continued)

Failure to follow the prescribed maintenance at the recommended intervals will impair the package safety, performance characteristics, shorten the package's life, and will negatively affect the warranty coverage of the package.

NOTE

Operating the machine package in a severe environment may require more frequent service intervals.

Vanair® Manufacturing, Inc., considers the maintenance schedule given in **Table 5B: Maintenance Schedule Intervals**, to be part of the warranty agreement with the customer. This maintenance regimen must be followed in order to protect the warranty of the machine package.

Vanair® requires that a consistent service regimen be established for engine oil changes, and engine and compressor air filter servicing. The schedule given in **Table 5A** (at a glance), and **Table 5C** provide a suggested regimen for keeping the Viper™ Gas in top running condition. The service schedule given in **Tables 5A** & **5C** is designed so that many of the other maintenance tasks are completed when the engine and compressor air filters are serviced, and the engine oil is changed.

Please take a moment to acquaint yourself with the service schedule. There is also a corresponding service log (**Tables 5A** through **5D**) to assist the customer in establishing a maintenance routine log.

For assistance in obtaining routine maintenance or replacement parts, consult **Tables 5A** through **5D**, **Section 7.1, Parts Ordering Procedure**, and **Table 7A: Recommended Spare Parts List**.

5.3 REPLACEMENT PARTS

Replacement parts should be purchased through your local Vanair® representative or where the Viper™ Gas package was purchased. If, for any reason, parts are not available in this manner, they can be purchased from Vanair directly.

IMPORTANT

Table 5A: Maintenance Schedule at a Glance, and Table 5B: Maintenance Schedule Intervals, in Section 5, contain items that require maintenance on a routine basis, and also those parts that may require maintenance over the course of the Viper™ Gas package's performance schedule. Although this recommended list is proffered as a comprehensive guide to replacement parts, damage may occur to the machine beyond the scope of this listing.

Should any part of the Viper™ Gas package that is not listed in Tables 5A or 5B become damaged or inoperable, use the various sub-sections in Section 5, and/or the various part displays in Section 7, to best locate and identify the damaged part(s).

Vanair® Manufacturing, Inc.
A Lincoln Electric Company
10896 West 300 North
Michigan City, IN 46360
Telephone: (800) 526-8817
Service: (844) VAN-SERV
service@vanair.com
sales@vanair.com
vanair.com

Continued on page 5 - 17...

TABLE 5A: GAS VIPER™ GV3 - MAINTENANCE SCHEDULE AT A GLANCE

TASK / DESCRIPTION	SERVICE INTERVAL				
	DAILY	50 HOUR BREAK-IN	ANNUALLY OR EVERY		
			100 HOURS	200 HOURS	500 HOURS
Check - Engine & Compressor oil levels	■				
Check - Coolant recovery tank level	■				
Inspect - Unit for Oil leaks or damage	■				
Inspect - Belt drive tension	■				
Inspect - Ventilation openings and surroundings	■				
Inspect - Engine Cooler fins	■				
Change - Engine Oil, VANAIR® P/N: 276041 (2x) *Engine Oil Capacity - IGX800: 1.9 QT / IGX700: 1.8 QT		■			
Change - Engine Oil Filter, VANAIR® P/N: 281452-26		■			
Inspect - Engine Fuel Lines & Connections		■			
Change - Engine Oil, VANAIR® P/N: 276041 (2x) *Engine Oil Capacity - IGX800: 1.9 QT / IGX700: 1.8 QT			■		
Change - Engine Oil Filter, VANAIR P/N: 281452-26			■		
Inspect - Engine Fuel Lines & Connections			■		
Inspect/Clean - Engine & Compressor Air Filters			■		
Change - Engine Fuel Filter Element, VANAIR® P/N: 281452-01				■	
Change - Compressor Air Filter Element, VANAIR® P/N: 281414-01				■	
Inspect - Engine Valve Clearance.				■	
Adjust - Engine Valve Clearance if needed. Replace SHAFT, ROCKER ARM if damaged. VANAIR® P/N: 281452-31				■	
Inspect - Compressor Cooler Hoses				■	
Inspect - Unit mounting bolts/isolator condition				■	
Inspect - Battery cables and connections				■	
Inspect - Engine Spark Plugs				■	
Blow out the Compressor Oil Cooler				■	
Change - Compressor Oil, VANAIR® P/N: 264626-1GAL (one gallon container: compressor system capacity is 1.9 gallons)		■			■
Change - Compressor Air Filter Element, VANAIR® P/N: 281414-01					■
Change - Compressor Oil Separator Element, VANAIR P/N: 273080					■
Change - Compressor Oil Filter, VANAIR® P/N: 266801		■			■
Change - Belt 80 CFM Unit, VANAIR® P/N: 281454 // Belt 70, 60 & 55 CFM Units, VANAIR® P/N: 282725					■
Change - Engine Air Filter Element, VANAIR® P/N: 281452-03					■
Change - Engine Air PRE-Filter Element, VANAIR® P/N: 281452-02					■
Replace - Engine Spark Plugs, VANAIR® P/N: 281452-04					■
Inspect - Belt System Tensioners					■

TABLE 5B: SERVICE KIT CONTENT BREAKDOWN

KIT DESCRIPTION	PART DESCRIPTION	ORDER NO.	QTY
ENGINE MAINTENANCE - KIT 1482:	Oil, Honda Motor 10W-30 (1 Quart)	276041	2
	Filter, Fuel Honda IGX800	281452-01	1
	Element, Air Pre-Filter	281452-02	1
	Element, Primary Air Filter	281452-03	1
	Filter, Oil Honda	281452-26	1
COMPRESSOR 50 HR MAINTENANCE - KIT 1212:	Oil, Vanguard™ Compressor (1 Gallon)	264626-1GAL	2
	Filter, Compressor oil	266801	1
COMPRESSOR 500HR MAINTENANCE - KIT 1221 (with Type A air filter):	Oil, Vanguard™ Compressor (1 Gallon)	264626-1GAL	2
	Element, Air Filter 80 CFM	265546-004	1
	Filter, Compressor Oil	266801	1
	Separator, Air/Oil Spin On	273080	1
COMPRESSOR 1YR/500HRS MAINTENANCE - KIT 1483 (with Type B air filter):	Oil, Vanguard™ Compressor (1 Gallon)	264626-1GAL	2
	Filter, Compressor Oil	266801	1
	Separator, Air/Oil Spin On	273080	1
	Filter, air element GV3	281414-01	1

TABLE 5C: VIPER™ MAINTENANCE SCHEDULE INTERVALS

⚠WARNING

Before performing maintenance:

Shut down machine, relieve all system pressure and lock out all power, as per the Safety Section of this manual.

Always clearly tag the start-up instrumentation against accidental system start-ups during maintenance.

SERVICE INTERVAL- Refer to **IMPORTANT** under **Table 5B**				
		ANNUALLY OR EVERY...		
DAILY	BREAK-IN PERIOD First 50 Hours	100 HOURS	200 HOURS	500 HOURS

TABLE 5D: ROUTINE MAINTENANCE REPLACEMENT KITS - COMPRESSOR

KEY NO.	DESCRIPTION	QTY
KIT1482	Kit, Engine Service - filters [air pre-cleaner, air, oil, fuel], and motor oil [x2 qt]	1
KIT1212	Kit, Compressor First 50 Hour Service - Vanguard™ oil [x2 gal], oil filter	1
KIT1221	Kit, Compressor 500 Hour Service - **"Type A"** air filter, oil & separator elements, Vanguard™ oil [x2 gal]	1
KIT1483	Kit, Compressor 500 Hour Service - **"Type B"** air filter, oil & separator elements, Vanguard™ oil [x2 gal]	1

NOTE: Refer to **Section 7, Table 7A** for kit content item identification, and additional replacement parts items.

IMPORTANT: If working in dusty or dirty conditions, reduce the recommended time intervals between servicing by half for engine and compressor oil change, and engine and compressor filter servicing.

PLEASE NOTE: WHEN ORDERING PARTS, INDICATE MACHINE SERIAL NUMBER.

REFERENCE:

Figure for Engine Routine Maintenance Component Locations

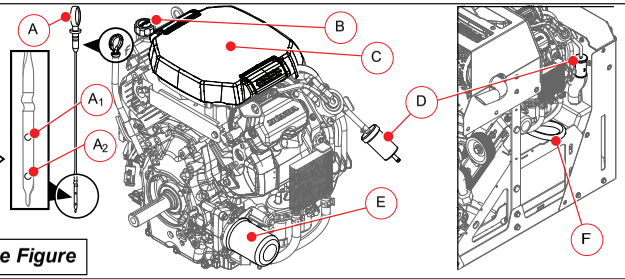

Engine Reference Figure

KEY	DESCRIPTION	KEY	DESCRIPTION
A	ENGINE OIL LEVEL GAUGE DIPSTICK	C	ENGINE AIR FILTER HOUSING
A_1	OIL LEVEL MARK - FULL	D	ENGINE FUEL FILTER
A_2	OIL LEVEL MARK - EMPTY	E	ENGINE OIL FILTER
B	ENGINE OIL FILL PORT/CAP	F	ENGINE OIL DRAIN HOSE

NOTE: The figure shown at left is for reference to the engine's main routine maintenance check points. For full instruction on engine maintenance, please refer to the Engine Operation Manual.

KEY	TASK DESCRIPTION						ACTION TO TAKE / REFERENCE
1	Check engine oil level	■	■				**REFERENCE:** • Refer to the ***Engine Reference Figure*** at the top of the page. **PROCEDURE:** Refer to the Engine Operation Manual for engine oil level check procedure. For engine oil top off/replacement order engine oil **no. 276041** (sold in quart containers [engine capacity = 1.8 to 1.9 qts]). Note that the Engine Service Kit **no. KIT1482** includes two quarts of motor oil.
2	Check compressor oil level	■					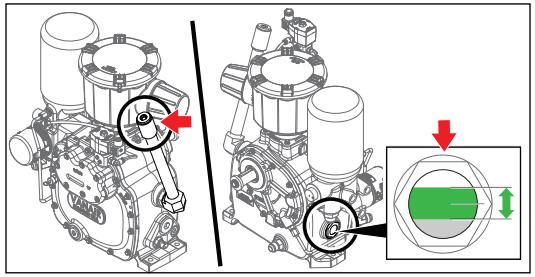 **REFERENCE (TYPICAL):** • Oil fill port [⬅] • Oil sight glass [⬇] • Optimal oil level range [↕] ɪ ɪ Optimal oil level is between 1/4 - 3/4 of sight glass. **DO NOT TOP OFF AT THE FILL PORT / DO NOT OVER-FILL** - use the sight glass only to determine proper compressor oil level. ***...Continued next page...***

Continued on next page

VANAIR® MANUFACTURING, INC.
A Lincoln Electric Company
(844) VAN-SERV • vanair.com

TABLE 5C: VIPER™ MAINTENANCE SCHEDULE INTERVALS

⚠WARNING

Before performing maintenance:

Shut down machine, relieve all system pressure and lock out all power, as per the Safety Section of this manual.

Always clearly tag the start-up instrumentation against accidental system start-ups during maintenance.

	SERVICE INTERVAL- Refer to **IMPORTANT** under **Table 5B**			
		ANNUALLY OR EVERY...		
DAILY	BREAK-IN PERIOD First 50 Hours	100 HOURS	200 HOURS	500 HOURS

TABLE 5D: ROUTINE MAINTENANCE REPLACEMENT KITS - COMPRESSOR

KEY NO.	DESCRIPTION	QTY
KIT1482	Kit, Engine Service - filters [air pre-cleaner, air, oil, fuel], and motor oil [x2 qt]	1
KIT1212	Kit, Compressor First 50 Hour Service - Vanguard™ oil [x2 gal], oil filter	1
KIT1221	Kit, Compressor 500 Hour Service - **"Type A"** air filter, oil & separator elements, Vanguard™ oil [x2 gal]	1
KIT1483	Kit, Compressor 500 Hour Service - **"Type B"** air filter, oil & separator elements, Vanguard™ oil [x2 gal]	1

NOTE: Refer to **Section 7, Table 7A** for kit content item identification, and additional replacement parts items.

IMPORTANT: If working in dusty or dirty conditions, reduce the recommended time intervals between servicing by half for engine and compressor oil change, and engine and compressor filter servicing.

PLEASE NOTE: WHEN ORDERING PARTS, INDICATE MACHINE SERIAL NUMBER.

REFERENCE:

Figure for Engine Routine Maintenance Component Locations

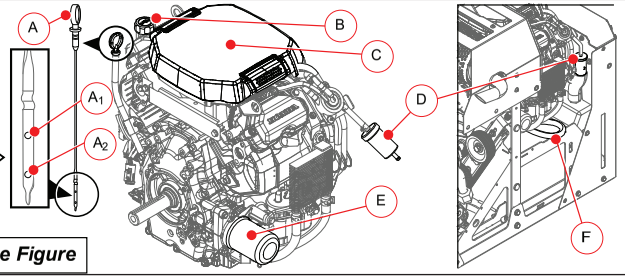

Engine Reference Figure

KEY	DESCRIPTION	KEY	DESCRIPTION
A	ENGINE OIL LEVEL GAUGE DIPSTICK	C	ENGINE AIR FILTER HOUSING
A_1	OIL LEVEL MARK - FULL	D	ENGINE FUEL FILTER
A_2	OIL LEVEL MARK - EMPTY	E	ENGINE OIL FILTER
B	ENGINE OIL FILL PORT/CAP	F	ENGINE OIL DRAIN HOSE

NOTE: The figure shown at left is for reference to the engine's main routine maintenance check points. For full instruction on engine maintenance, please refer to the Engine Operation Manual.

KEY	TASK DESCRIPTION						ACTION TO TAKE / REFERENCE
2	Check compressor oil level (continued)	■					*...continued from previous page...* **PROCEDURE:** Remove fill port cap. Add oil as necessary at the oil fill port, but take caution to fill slowly in order to avoid overfill. Never top off at the fill port tube - use the sight glass oil range shown above [⬍]. **DO NOT** mix different oil types.
3	Inspect unit for oil leaks or damage	■					**PROCEDURE:** Inspect the unit for any signs of leaks or damage. Remedy by tightening any plugs, connections, etc.
4	Inspect belt drive tension	■					**PROCEDURE:** Refer to ***Section 5.4.1, Adjusting the Belt Tension*** in **Section 5, Maintenance**. If belt needs to be replaced, refer to **Section 5.4.1.1** to determined proper belt to order.
5	Inspect ventilation openings and surroundings	■					**PROCEDURE:** Inspect all ventilation areas and openings to ensure that they are free of anything that may hamper free flow circulation.
6	Inspect engine cooler fins	■					**PROCEDURE:** Clean or clear as necessary. Use only low pressure air to clean cooler fins; do not use high pressure air nor a pressure washer. *...Continued next page...*

Continued on next page

TABLE 5C: VIPER™ MAINTENANCE SCHEDULE INTERVALS

⚠WARNING

Before performing maintenance:

Shut down machine, relieve all system pressure and lock out all power, as per the Safety Section of this manual.

Always clearly tag the start-up instrumentation against accidental system start-ups during maintenance.

SERVICE INTERVAL- Refer to **IMPORTANT** under **Table 5B**

DAILY	BREAK-IN PERIOD First 50 Hours	ANNUALLY OR EVERY... 100 HOURS	200 HOURS	500 HOURS

TABLE 5D: ROUTINE MAINTENANCE REPLACEMENT KITS - COMPRESSOR

KEY NO.	DESCRIPTION	QTY
KIT1482	Kit, Engine Service - filters [air pre-cleaner, air, oil, fuel], and motor oil [x2 qt]	1
KIT1212	Kit, Compressor First 50 Hour Service - Vanguard™ oil [x2 gal], oil filter	1
KIT1221	Kit, Compressor 500 Hour Service - **"Type A"** air filter, oil & separator elements, Vanguard™ oil [x2 gal]	1
KIT1483	Kit, Compressor 500 Hour Service - **"Type B"** air filter, oil & separator elements, Vanguard™ oil [x2 gal]	1

NOTE: Refer to **Section 7, Table 7A** for kit content item identification, and additional replacement parts items.

IMPORTANT: If working in dusty or dirty conditions, reduce the recommended time intervals between servicing by half for engine and compressor oil change, and engine and compressor filter servicing.

PLEASE NOTE: WHEN ORDERING PARTS, INDICATE MACHINE SERIAL NUMBER.

REFERENCE:

Figure for Engine Routine Maintenance Component Locations

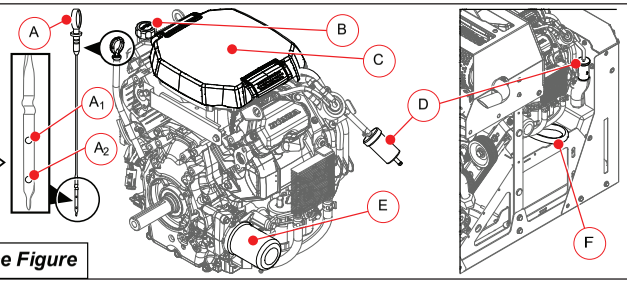

Engine Reference Figure

KEY	DESCRIPTION	KEY	DESCRIPTION
A	ENGINE OIL LEVEL GAUGE DIPSTICK	C	ENGINE AIR FILTER HOUSING
A_1	OIL LEVEL MARK - FULL	D	ENGINE FUEL FILTER
A_2	OIL LEVEL MARK - EMPTY	E	ENGINE OIL FILTER
B	ENGINE OIL FILL PORT/CAP	F	ENGINE OIL DRAIN HOSE

NOTE: The figure shown at left is for reference to the engine's main routine maintenance check points. For full instruction on engine maintenance, please refer to the Engine Operation Manual.

KEY	TASK DESCRIPTION						ACTION TO TAKE / REFERENCE
6	Inspect engine cooler fins (continued)	■	■				*...continued from previous page...* **IMPORTANT** **Do not clean radiator with firm tools such as spatulas or screwdrivers. Such instruments may damage the fins or tubes, and/or cause coolant leaks or decrease cooling performance.**
7	Change engine oil **NOTE** ***Engine Oil Capacity - refer to Table 2A in the Section 2, Specifications, or the Engine Operation Manual***		■	■			**REFERENCE:** • Refer to the ***Engine Reference Figure*** at the top of the page. **PROCEDURE:** For engine oil top off/replacement order engine oil **no. 276041** (sold in quart containers. Refer to **Table 7A** in **Section 7** to obtain order numbers for ordering replacement component parts (oil filter, replacement oil) separately. For full Engine Service Kit **no. KIT1482**. Refer to the Engine Operation Manual for engine oil replacement procedure.
8	Change engine oil filter		■	■			**REFERENCE:** • Refer to the Engine Reference Figure at the top of the page. **PROCEDURE:** Refer to **Table 7A** in **Section 7** to obtain order numbers for ordering replacement component parts (oil filter, replacement oil) separately. For full Engine Service Kit **no. KIT1482**. Refer to the Engine Operation Manual for engine oil filter replacement procedure.

Continued on next page

VANAIR® MANUFACTURING, INC.
A Lincoln Electric Company
(844) VAN-SERV • vanair.com

TABLE 5C: VIPER™ MAINTENANCE SCHEDULE INTERVALS

⚠WARNING

Before performing maintenance:

Shut down machine, relieve all system pressure and lock out all power, as per the Safety Section of this manual.

Always clearly tag the start-up instrumentation against accidental system start-ups during maintenance.

SERVICE INTERVAL- Refer to **IMPORTANT** under **Table 5B**

DAILY	BREAK-IN PERIOD First 50 Hours	ANNUALLY OR EVERY... 100 HOURS	200 HOURS	500 HOURS

TABLE 5D: ROUTINE MAINTENANCE REPLACEMENT KITS - COMPRESSOR

KEY NO.	DESCRIPTION	QTY
KIT1482	Kit, Engine Service - filters [air pre-cleaner, air, oil, fuel], and motor oil [x2 qt]	1
KIT1212	Kit, Compressor First 50 Hour Service - Vanguard™ oil [x2 gal], oil filter	1
KIT1221	Kit, Compressor 500 Hour Service - **"Type A"** air filter, oil & separator elements, Vanguard™ oil [x2 gal]	1
KIT1483	Kit, Compressor 500 Hour Service - **"Type B"** air filter, oil & separator elements, Vanguard™ oil [x2 gal]	1

NOTE: Refer to **Section 7, Table 7A** for kit content item identification, and additional replacement parts items.

IMPORTANT: If working in dusty or dirty conditions, reduce the recommended time intervals between servicing by half for engine and compressor oil change, and engine and compressor filter servicing.

PLEASE NOTE: WHEN ORDERING PARTS, INDICATE MACHINE SERIAL NUMBER.

REFERENCE:

Figure for Engine Routine Maintenance Component Locations

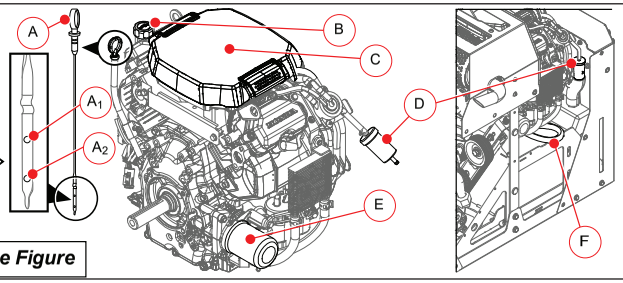

Engine Reference Figure

KEY	DESCRIPTION	KEY	DESCRIPTION
A	ENGINE OIL LEVEL GAUGE DIPSTICK	C	ENGINE AIR FILTER HOUSING
A_1	OIL LEVEL MARK - FULL	D	ENGINE FUEL FILTER
A_2	OIL LEVEL MARK - EMPTY	E	ENGINE OIL FILTER
B	ENGINE OIL FILL PORT/CAP	F	ENGINE OIL DRAIN HOSE

NOTE: The figure shown at left is for reference to the engine's main routine maintenance check points. For full instruction on engine maintenance, please refer to the Engine Operation Manual.

KEY	TASK DESCRIPTION						ACTION TO TAKE / REFERENCE
9	Inspect engine fuel lines & connections		■	■			**PROCEDURE:** Inspect all fuel lines and connections. Tighten if necessary. Refer to the Engine Operation Manual for additional details. If necessary replace fuel filter (refer to **Table 7A** in **Section 7**).
10	Inspect/clean engine air filters		■	■			**REFERENCE:** • Refer to the ***Engine Reference Figure*** at the top of the page. **PROCEDURE:** Refer to the Engine Operation Manual for engine air filter inspection procedure. Should the filter(s) need replacement, order engine pre-filter replacement **no. 281452-02**, and engine air filter replacement **no. 281452-03**. Note that the full Engine Service Kit **no. KIT1482** also comes with both a pre-filter and air filter replacement.
11A	Inspect/clean compressor air filter ("Type A") 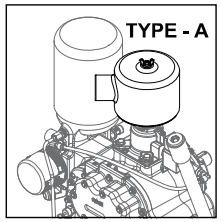 		■	■			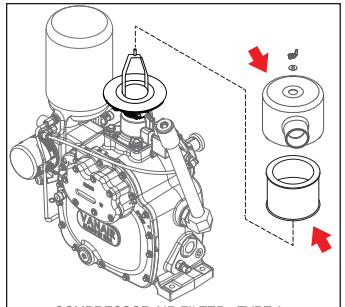 COMPRESSOR AIR FILTER - TYPE A **REFERENCE - "TYPE A" AIR FILTER:** • Air filter housing [↘] • Air filter [↖] **PROCEDURE:** Inspect filter for holes, tears and dirt build-up. Replace if necessary; refer to key **#14A** of this table for air filter replacement procedure..

Continued on next page

TABLE 5C: VIPER™ MAINTENANCE SCHEDULE INTERVALS

⚠WARNING

Before performing maintenance:

Shut down machine, relieve all system pressure and lock out all power, as per the Safety Section of this manual.

Always clearly tag the start-up instrumentation against accidental system start-ups during maintenance.

SERVICE INTERVAL- Refer to IMPORTANT under Table 5B				
DAILY	BREAK-IN PERIOD First 50 Hours	ANNUALLY OR EVERY...		
		100 HOURS	200 HOURS	500 HOURS

TABLE 5D: ROUTINE MAINTENANCE REPLACEMENT KITS - COMPRESSOR

KEY NO.	DESCRIPTION	QTY
KIT1482	Kit, Engine Service - filters [air pre-cleaner, air, oil, fuel], and motor oil [x2 qt]	1
KIT1212	Kit, Compressor First 50 Hour Service - Vanguard™ oil [x2 gal], oil filter	1
KIT1221	Kit, Compressor 500 Hour Service - **"Type A"** air filter, oil & separator elements, Vanguard™ oil [x2 gal]	1
KIT1483	Kit, Compressor 500 Hour Service - **"Type B"** air filter, oil & separator elements, Vanguard™ oil [x2 gal]	1

NOTE: Refer to **Section 7, Table 7A** for kit content item identification, and additional replacement parts items.

IMPORTANT: If working in dusty or dirty conditions, reduce the recommended time intervals between servicing by half for engine and compressor oil change, and engine and compressor filter servicing.

PLEASE NOTE: WHEN ORDERING PARTS, INDICATE MACHINE SERIAL NUMBER.

REFERENCE:

Figure for Engine Routine Maintenance Component Locations

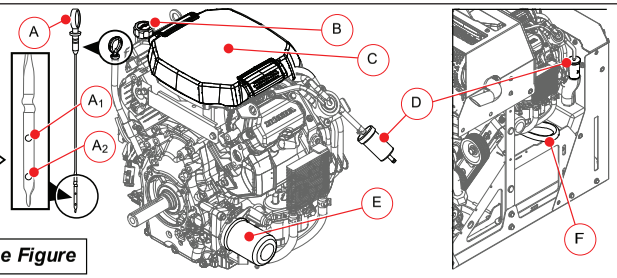

Engine Reference Figure

KEY	DESCRIPTION	KEY	DESCRIPTION
A	ENGINE OIL LEVEL GAUGE DIPSTICK	C	ENGINE AIR FILTER HOUSING
A_1	OIL LEVEL MARK - FULL	D	ENGINE FUEL FILTER
A_2	OIL LEVEL MARK - EMPTY	E	ENGINE OIL FILTER
B	ENGINE OIL FILL PORT/CAP	F	ENGINE OIL DRAIN HOSE

NOTE: The figure shown at left is for reference to the engine's main routine maintenance check points. For full instruction on engine maintenance, please refer to the Engine Operation Manual.

KEY	TASK DESCRIPTION						ACTION TO TAKE / REFERENCE
11B	Inspect/clean compressor air filter ("Type B") 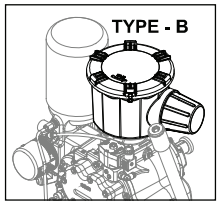			■			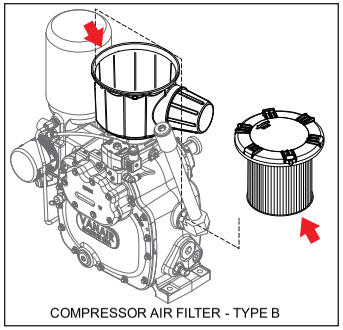 COMPRESSOR AIR FILTER - TYPE B **REFERENCE - "TYPE B" AIR FILTER:** • Air filter housing [↘] • Air filter [↖] **PROCEDURE:** Inspect filter for holes, tears and dirt build-up. Replace if necessary; refer to key **#14B** of this table for air filter replacement procedure.
12	Inspect engine valve clearance			■			**PROCEDURE:** Refer to the Engine Operation Manual for engine valve maintenance. Replace Shaft, Rocker Arm if damaged (order Vanair® part **no. 281452-31**).
13	Change engine fuel filter element				■		**REFERENCE:** • Refer to the ***Engine Reference Figure*** at the top of this page. **PROCEDURE:** Order fuel filter replacement no. **281452-01.** Note that a fuel filter replacement is also included with the full Engine Service Kit **no. KIT1482**. Refer to the Engine Operation Manual for fuel filter replacement instructions.

Continued on next page

VANAIR® MANUFACTURING, INC.
A Lincoln Electric Company
(844) VAN-SERV • vanair.com

TABLE 5C: VIPER™ MAINTENANCE SCHEDULE INTERVALS

⚠WARNING

Before performing maintenance:

Shut down machine, relieve all system pressure and lock out all power, as per the Safety Section of this manual.

Always clearly tag the start-up instrumentation against accidental system start-ups during maintenance.

SERVICE INTERVAL- Refer to **IMPORTANT** under **Table 5B**

DAILY	BREAK-IN PERIOD First 50 Hours	ANNUALLY OR EVERY... 100 HOURS	200 HOURS	500 HOURS

TABLE 5D: ROUTINE MAINTENANCE REPLACEMENT KITS - COMPRESSOR

KEY NO.	DESCRIPTION	QTY
KIT1482	Kit, Engine Service - filters [air pre-cleaner, air, oil, fuel], and motor oil [x2 qt]	1
KIT1212	Kit, Compressor First 50 Hour Service - Vanguard™ oil [x2 gal], oil filter	1
KIT1221	Kit, Compressor 500 Hour Service - **"Type A"** air filter, oil & separator elements, Vanguard™ oil [x2 gal]	1
KIT1483	Kit, Compressor 500 Hour Service - **"Type B"** air filter, oil & separator elements, Vanguard™ oil [x2 gal]	1

NOTE: Refer to **Section 7, Table 7A** for kit content item identification, and additional replacement parts items.

IMPORTANT: If working in dusty or dirty conditions, reduce the recommended time intervals between servicing by half for engine and compressor oil change, and engine and compressor filter servicing.

PLEASE NOTE: WHEN ORDERING PARTS, INDICATE MACHINE SERIAL NUMBER.

REFERENCE:

Figure for Engine Routine Maintenance Component Locations

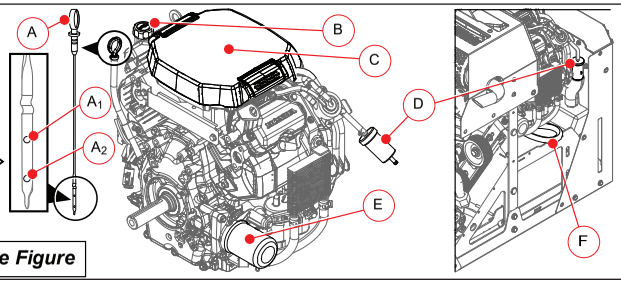

Engine Reference Figure

KEY	DESCRIPTION	KEY	DESCRIPTION
A	ENGINE OIL LEVEL GAUGE DIPSTICK	C	ENGINE AIR FILTER HOUSING
A_1	OIL LEVEL MARK - FULL	D	ENGINE FUEL FILTER
A_2	OIL LEVEL MARK - EMPTY	E	ENGINE OIL FILTER
B	ENGINE OIL FILL PORT/CAP	F	ENGINE OIL DRAIN HOSE

NOTE: The figure shown at left is for reference to the engine's main routine maintenance check points. For full instruction on engine maintenance, please refer to the Engine Operation Manual.

KEY	TASK DESCRIPTION						ACTION TO TAKE / REFERENCE
14A	Change **compressor** air filter element - **"TYPE A" Air Filter** (inspect every 100 hours) 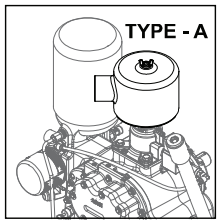				■	■	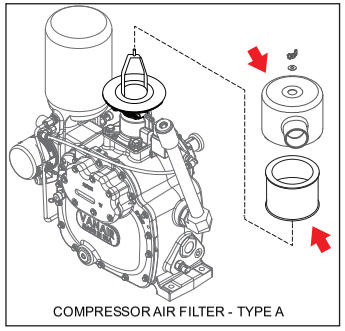 COMPRESSOR AIR FILTER - TYPE A **REFERENCE - "TYPE A" AIR FILTER:** • Air filter housing [↘] • Air filter [↖] **PROCEDURE:** Order air filter replacement element **no. 265546-004**. Note that the 500 hour kit **no. KIT1221** also includes a **"Type A"** air filter replacement element. Remove the wing nut and washer securing the air filter housing cover to the air inlet. Remove the cover then remove the worn air filter element. Replace with new filter, replace the cover, washer, and wing nut and tighten wing nut to secure. Discard/recycle worn air filter assembly.

Continued on next page

TABLE 5C: VIPER™ MAINTENANCE SCHEDULE INTERVALS

⚠WARNING

Before performing maintenance:

Shut down machine, relieve all system pressure and lock out all power, as per the Safety Section of this manual.

Always clearly tag the start-up instrumentation against accidental system start-ups during maintenance.

SERVICE INTERVAL- Refer to **IMPORTANT** under **Table 5B**

DAILY	BREAK-IN PERIOD First 50 Hours	ANNUALLY OR EVERY... 100 HOURS	200 HOURS	500 HOURS

TABLE 5D: ROUTINE MAINTENANCE REPLACEMENT KITS - COMPRESSOR

KEY NO.	DESCRIPTION	QTY
KIT1482	Kit, Engine Service - filters [air pre-cleaner, air, oil, fuel], and motor oil [x2 qt]	1
KIT1212	Kit, Compressor First 50 Hour Service - Vanguard™ oil [x2 gal], oil filter	1
KIT1221	Kit, Compressor 500 Hour Service - **"Type A"** air filter, oil & separator elements, Vanguard™ oil [x2 gal]	1
KIT1483	Kit, Compressor 500 Hour Service - **"Type B"** air filter, oil & separator elements, Vanguard™ oil [x2 gal]	1

NOTE: Refer to **Section 7, Table 7A** for kit content item identification, and additional replacement parts items.

IMPORTANT: If working in dusty or dirty conditions, reduce the recommended time intervals between servicing by half for engine and compressor oil change, and engine and compressor filter servicing.

PLEASE NOTE: WHEN ORDERING PARTS, INDICATE MACHINE SERIAL NUMBER.

REFERENCE:

Figure for Engine Routine Maintenance Component Locations

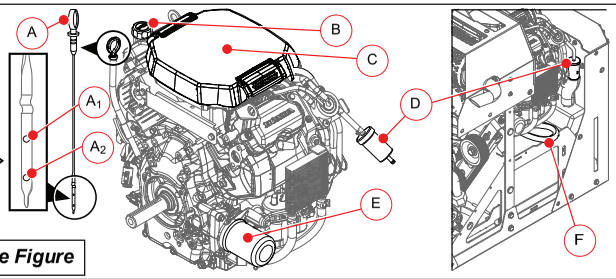

Engine Reference Figure

KEY	DESCRIPTION	KEY	DESCRIPTION
A	ENGINE OIL LEVEL GAUGE DIPSTICK	C	ENGINE AIR FILTER HOUSING
A_1	OIL LEVEL MARK - FULL	D	ENGINE FUEL FILTER
A_2	OIL LEVEL MARK - EMPTY	E	ENGINE OIL FILTER
B	ENGINE OIL FILL PORT/CAP	F	ENGINE OIL DRAIN HOSE

NOTE: The figure shown at left is for reference to the engine's main routine maintenance check points. For full instruction on engine maintenance, please refer to the Engine Operation Manual.

KEY	TASK DESCRIPTION						ACTION TO TAKE / REFERENCE
14B	Change compressor air filter element - "TYPE B" Air Filter (inspect every 100 hours) 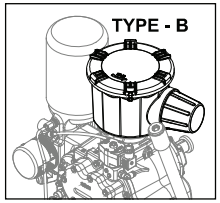				■	■	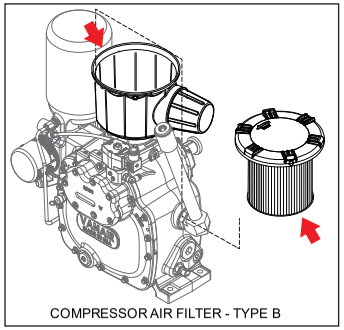 COMPRESSOR AIR FILTER - TYPE B **REFERENCE - "TYPE B" AIR FILTER:** • Air filter housing [↘] • Air filter [↖] **PROCEDURE:** Order air filter replacement element **no. 281414-01**. Note that the 500 hour kit **no. KIT1483** also includes a **"Type B"** air filter replacement element. The air filter replacement comes attached to a new housing lid. Remove the air filter housing cover by twisting counter-clockwise. Place the new replacement air filter/cover assembly onto the air filter body clockwise until the replacement air filter assembly is seated. Discard worn air filter assembly.
15	Inspect radiator hoses				■		**PROCEDURE:** Inspect radiator hoses for wear, cracks, etc. Replace if necessary.
16	Inspect unit mounting bolts/isolator condition				■		**PROCEDURE:** Inspect the compressor mounting bolts and isolators condition. Replace if necessary.
17	Inspect battery cables and connections				■		**PROCEDURE:** Inspect battery cables and connections for wear and/or corrosion. Replace as needed; clear connections by wiping off any build-up, dirt, etc., with a clean cloth.

Continued on next page

VANAIR® MANUFACTURING, INC.
A Lincoln Electric Company
(844) VAN-SERV • vanair.com

TABLE 5C: VIPER™ MAINTENANCE SCHEDULE INTERVALS

⚠WARNING

Before performing maintenance:

Shut down machine, relieve all system pressure and lock out all power, as per the Safety Section of this manual.

Always clearly tag the start-up instrumentation against accidental system start-ups during maintenance.

SERVICE INTERVAL- Refer to **IMPORTANT** under **Table 5B**

DAILY	BREAK-IN PERIOD First 50 Hours	ANNUALLY OR EVERY... 100 HOURS	200 HOURS	500 HOURS

TABLE 5D: ROUTINE MAINTENANCE REPLACEMENT KITS - COMPRESSOR

KEY NO.	DESCRIPTION	QTY
KIT1482	Kit, Engine Service - filters [air pre-cleaner, air, oil, fuel], and motor oil [x2 qt]	1
KIT1212	Kit, Compressor First 50 Hour Service - Vanguard™ oil [x2 gal], oil filter	1
KIT1221	Kit, Compressor 500 Hour Service - **"Type A"** air filter, oil & separator elements, Vanguard™ oil [x2 gal]	1
KIT1483	Kit, Compressor 500 Hour Service - **"Type B"** air filter, oil & separator elements, Vanguard™ oil [x2 gal]	1

NOTE: Refer to **Section 7, Table 7A** for kit content item identification, and additional replacement parts items.

IMPORTANT: If working in dusty or dirty conditions, reduce the recommended time intervals between servicing by half for engine and compressor oil change, and engine and compressor filter servicing.

PLEASE NOTE: WHEN ORDERING PARTS, INDICATE MACHINE SERIAL NUMBER.

REFERENCE:

Figure for Engine Routine Maintenance Component Locations

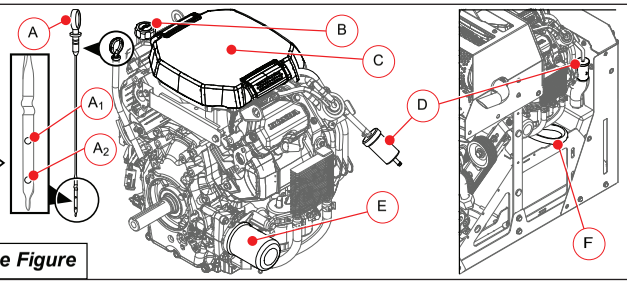

Engine Reference Figure

KEY	DESCRIPTION	KEY	DESCRIPTION
A	ENGINE OIL LEVEL GAUGE DIPSTICK	C	ENGINE AIR FILTER HOUSING
A_1	OIL LEVEL MARK - FULL	D	ENGINE FUEL FILTER
A_2	OIL LEVEL MARK - EMPTY	E	ENGINE OIL FILTER
B	ENGINE OIL FILL PORT/CAP	F	ENGINE OIL DRAIN HOSE

NOTE: The figure shown at left is for reference to the engine's main routine maintenance check points. For full instruction on engine maintenance, please refer to the Engine Operation Manual.

KEY	TASK DESCRIPTION						ACTION TO TAKE / REFERENCE
18	Inspect engine spark plugs				■		**PROCEDURE:** Inspect spark plug for signs of corrosion, carbon and/or grime build-up. Refer to The Engine Operation manual for inspection and cleaning or replacement details.
19.1	Compressor full service change: oil filter, air filter, oil separator: OIL FILTER					■	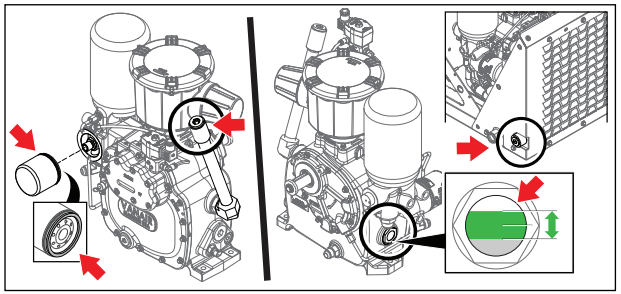 **REFERENCE (TYPICAL):** • Oil fill port [←] • Oil filter [↘] • Oil filter seal [↖] • Oil drain port/plug [→] • Oil level sight glass [↙] • Optimal oil level range [↕] ɪ (ɪ Refer to key **#2** in this Table) *...Continued next page...*

Continued on next page

TABLE 5C: VIPER™ MAINTENANCE SCHEDULE INTERVALS

⚠WARNING

Before performing maintenance:

Shut down machine, relieve all system pressure and lock out all power, as per the Safety Section of this manual.

Always clearly tag the start-up instrumentation against accidental system start-ups during maintenance.

SERVICE INTERVAL- Refer to **IMPORTANT** under **Table 5B**				
DAILY	BREAK-IN PERIOD First 50 Hours	ANNUALLY OR EVERY...		
		100 HOURS	200 HOURS	500 HOURS

TABLE 5D: ROUTINE MAINTENANCE REPLACEMENT KITS - COMPRESSOR

KEY NO.	DESCRIPTION	QTY
KIT1482	Kit, Engine Service - filters [air pre-cleaner, air, oil, fuel], and motor oil [x2 qt]	1
KIT1212	Kit, Compressor First 50 Hour Service - Vanguard™ oil [x2 gal], oil filter	1
KIT1221	Kit, Compressor 500 Hour Service - **"Type A"** air filter, oil & separator elements, Vanguard™ oil [x2 gal]	1
KIT1483	Kit, Compressor 500 Hour Service - **"Type B"** air filter, oil & separator elements, Vanguard™ oil [x2 gal]	1

NOTE: Refer to **Section 7, Table 7A** for kit content item identification, and additional replacement parts items.

IMPORTANT: If working in dusty or dirty conditions, reduce the recommended time intervals between servicing by half for engine and compressor oil change, and engine and compressor filter servicing.

PLEASE NOTE: WHEN ORDERING PARTS, INDICATE MACHINE SERIAL NUMBER.

REFERENCE:

Figure for Engine Routine Maintenance Component Locations

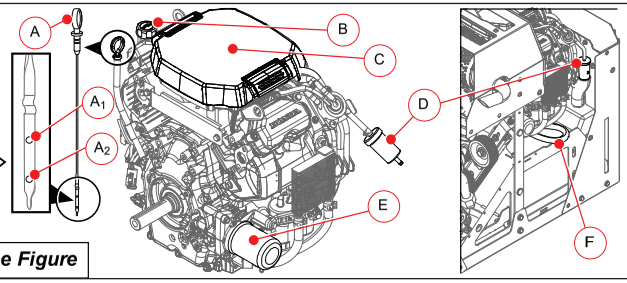

Engine Reference Figure

KEY	DESCRIPTION	KEY	DESCRIPTION
A	ENGINE OIL LEVEL GAUGE DIPSTICK	C	ENGINE AIR FILTER HOUSING
A_1	OIL LEVEL MARK - FULL	D	ENGINE FUEL FILTER
A_2	OIL LEVEL MARK - EMPTY	E	ENGINE OIL FILTER
B	ENGINE OIL FILL PORT/CAP	F	ENGINE OIL DRAIN HOSE

NOTE: The figure shown at left is for reference to the engine's main routine maintenance check points. For full instruction on engine maintenance, please refer to the Engine Operation Manual.

KEY	TASK DESCRIPTION						ACTION TO TAKE / REFERENCE
19.2	Compressor full service change: oil filter, air filter, oil separator: OIL FILTER *(continued)*					■	*...continued from previous page...* **PROCEDURE:** Order the 500 hour replacement kits (Refer to **Table 5C** for reorder number, depending upon air filter **"Type A"** [**no. KIT1221**], or air filter type **"Type B"** [**no. KIT1483**]). **NOTE** **For a FULL SERVICE application for the compressor unit the oil filter, air filter and separator element are replaced. It is recommended that all replacement components in the service kit are used, regardless of the condition of the parts to be replaced.** Remove oil drain port plug [➡]. Allow oil to completely drain from the compressor unit. Replace plug. At this time, for the full service maintenance, remove and replace the oil filter [↘], and remove and replace the separator element as well per **key #19.3**. **NOTE** **Coat element sealing rings on oil filter element and separator with a film of compressor oil before securing in place, to assure a complete seal.** Remove the oil fill port cap [⬅] and add oil as necessary (see **key #2**) at the oil fill port, but take caution to fill slowly in order to avoid overfill. **Never top off** oil at the fill port tube, as this floods the system - use the sight glass oil range shown above [↕] to achieve proper level. **DO NOT** mix different oil types. *...Continued next page...*

Continued on next page

VANAIR® MANUFACTURING, INC.
A Lincoln Electric Company
(844) VAN-SERV • vanair.com

TABLE 5C: VIPER™ MAINTENANCE SCHEDULE INTERVALS

⚠WARNING

Before performing maintenance:

Shut down machine, relieve all system pressure and lock out all power, as per the Safety Section of this manual.

Always clearly tag the start-up instrumentation against accidental system start-ups during maintenance.

SERVICE INTERVAL- Refer to IMPORTANT under Table 5B				
		ANNUALLY OR EVERY...		
DAILY	BREAK-IN PERIOD First 50 Hours	100 HOURS	200 HOURS	500 HOURS

TABLE 5D: ROUTINE MAINTENANCE REPLACEMENT KITS - COMPRESSOR

KEY NO.	DESCRIPTION	QTY
KIT1482	Kit, Engine Service - filters [air pre-cleaner, air, oil, fuel], and motor oil [x2 qt]	1
KIT1212	Kit, Compressor First 50 Hour Service - Vanguard™ oil [x2 gal], oil filter	1
KIT1221	Kit, Compressor 500 Hour Service - **"Type A"** air filter, oil & separator elements, Vanguard™ oil [x2 gal]	1
KIT1483	Kit, Compressor 500 Hour Service - **"Type B"** air filter, oil & separator elements, Vanguard™ oil [x2 gal]	1

NOTE: Refer to **Section 7, Table 7A** for kit content item identification, and additional replacement parts items.

IMPORTANT: If working in dusty or dirty conditions, reduce the recommended time intervals between servicing by half for engine and compressor oil change, and engine and compressor filter servicing.

PLEASE NOTE: WHEN ORDERING PARTS, INDICATE MACHINE SERIAL NUMBER.

REFERENCE:

Figure for Engine Routine Maintenance Component Locations

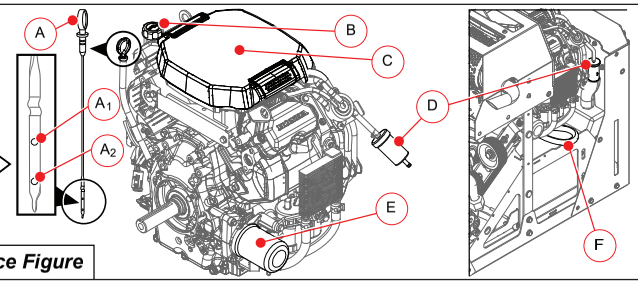

Engine Reference Figure

KEY	DESCRIPTION	KEY	DESCRIPTION
A	ENGINE OIL LEVEL GAUGE DIPSTICK	C	ENGINE AIR FILTER HOUSING
A_1	OIL LEVEL MARK - FULL	D	ENGINE FUEL FILTER
A_2	OIL LEVEL MARK - EMPTY	E	ENGINE OIL FILTER
B	ENGINE OIL FILL PORT/CAP	F	ENGINE OIL DRAIN HOSE

NOTE: The figure shown at left is for reference to the engine's main routine maintenance check points. For full instruction on engine maintenance, please refer to the Engine Operation Manual.

KEY	TASK DESCRIPTION						ACTION TO TAKE / REFERENCE
19.3	Compressor full service change: oil filter, air filter, oil separator: OIL SEPARATOR *(continued)*		■			■	

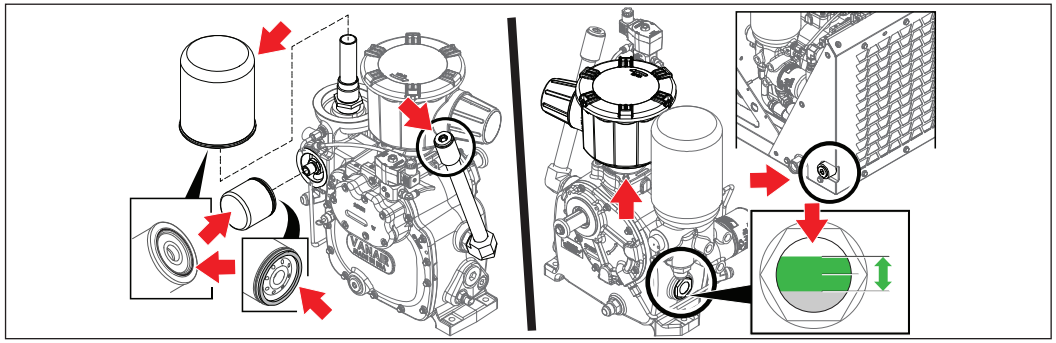

• Separator element filter [↙]	• Separator element filter seal [←]	• Oil filter [↗]
• Oil filter seal [↖]	• Oil fill port [↘]	• Air filter [↑] I
• Oil level sight glass [↓]	• Optimal oil level range [↕] II	• Oil drain port access [→]

I There are two air filter types available. Refer to Key **#14A** and **#14B** of this Table to determine which type properly matches the machine. "Type A" is shown in the illustration above.

II Optimal oil level is between 1/4 - 3/4 of sight glass. **DO NOT TOP OFF AT THE FILL PORT / DO NOT OVERFILL** - use the sight glass only to determine proper compressor oil level.

...Continued next page...

Continued on next page

TABLE 5C: VIPER™ MAINTENANCE SCHEDULE INTERVALS

⚠WARNING

Before performing maintenance:

Shut down machine, relieve all system pressure and lock out all power, as per the Safety Section of this manual.

Always clearly tag the start-up instrumentation against accidental system start-ups during maintenance.

SERVICE INTERVAL- Refer to **IMPORTANT** under **Table 5B**

DAILY	BREAK-IN PERIOD First 50 Hours	ANNUALLY OR EVERY... 100 HOURS	200 HOURS	500 HOURS

TABLE 5D: ROUTINE MAINTENANCE REPLACEMENT KITS - COMPRESSOR

KEY NO.	DESCRIPTION	QTY
KIT1482	Kit, Engine Service - filters [air pre-cleaner, air, oil, fuel], and motor oil [x2 qt]	1
KIT1212	Kit, Compressor First 50 Hour Service - Vanguard™ oil [x2 gal], oil filter	1
KIT1221	Kit, Compressor 500 Hour Service - **"Type A"** air filter, oil & separator elements, Vanguard™ oil [x2 gal]	1
KIT1483	Kit, Compressor 500 Hour Service - **"Type B"** air filter, oil & separator elements, Vanguard™ oil [x2 gal]	1

NOTE: Refer to **Section 7, Table 7A** for kit content item identification, and additional replacement parts items.

IMPORTANT: If working in dusty or dirty conditions, reduce the recommended time intervals between servicing by half for engine and compressor oil change, and engine and compressor filter servicing.

PLEASE NOTE: WHEN ORDERING PARTS, INDICATE MACHINE SERIAL NUMBER.

REFERENCE:

Figure for Engine Routine Maintenance Component Locations

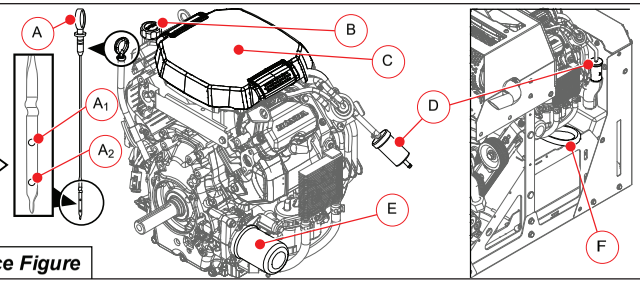

Engine Reference Figure

KEY	DESCRIPTION	KEY	DESCRIPTION
A	ENGINE OIL LEVEL GAUGE DIPSTICK	C	ENGINE AIR FILTER HOUSING
A_1	OIL LEVEL MARK - FULL	D	ENGINE FUEL FILTER
A_2	OIL LEVEL MARK - EMPTY	E	ENGINE OIL FILTER
B	ENGINE OIL FILL PORT/CAP	F	ENGINE OIL DRAIN HOSE

NOTE: The figure shown at left is for reference to the engine's main routine maintenance check points. For full instruction on engine maintenance, please refer to the Engine Operation Manual.

KEY	TASK DESCRIPTION						ACTION TO TAKE / REFERENCE
19.4	Compressor full service change: oil filter, air filter, oil separator: OIL SEPARATOR *(continued)*					■	*...continued from previous page...* **PROCEDURE:** Service kit **no. KIT1221** includes filter replacement **"Type A"**; Service kit **no. KIT1483** includes filter replacement **"Type B"**. Refer to key ***#14A*** ("Type A" air filter) or key ***#14B*** ("Type B" air filter) for replacement procedure. **NOTE** **Coat both oil filter replacement element sealing ring [↖], and the separator replacement element sealing ring [←], with a film of compressor oil before securing in place, to assure a complete seal.** To engage a full service application, drain the oil and remove the oil filter as outlined in **Key #19.2** above. Once that is completed remove the separator element with a strap wrench. Coat surface of sealing ring on replacement separator with compressor oil before mounting into place; hand-tighten, and then with a filter wrench, turn filter body an additional 1/2 to 3/4 turn to secure. Refill compressor with new oil as per **Key #4**; compressor oil fill is approximately four (4) quarts - **DO NOT OVERFILL**; use the sight glass to determine proper level. Discard used oil and worn filters under guidance of acceptable refuge/recycle laws *....Continued next page...*

Continued on next page

VANAIR® MANUFACTURING, INC.
A Lincoln Electric Company
(844) VAN-SERV • vanair.com

TABLE 5C: VIPER™ MAINTENANCE SCHEDULE INTERVALS

⚠WARNING

Before performing maintenance:

Shut down machine, relieve all system pressure and lock out all power, as per the Safety Section of this manual.

Always clearly tag the start-up instrumentation against accidental system start-ups during maintenance.

SERVICE INTERVAL- Refer to **IMPORTANT** under **Table 5B**

DAILY	BREAK-IN PERIOD First 50 Hours	ANNUALLY OR EVERY... 100 HOURS	200 HOURS	500 HOURS

TABLE 5D: ROUTINE MAINTENANCE REPLACEMENT KITS - COMPRESSOR

KEY NO.	DESCRIPTION	QTY
KIT1482	Kit, Engine Service - filters [air pre-cleaner, air, oil, fuel], and motor oil [x2 qt]	1
KIT1212	Kit, Compressor First 50 Hour Service - Vanguard™ oil [x2 gal], oil filter	1
KIT1221	Kit, Compressor 500 Hour Service - **"Type A"** air filter, oil & separator elements, Vanguard™ oil [x2 gal]	1
KIT1483	Kit, Compressor 500 Hour Service - **"Type B"** air filter, oil & separator elements, Vanguard™ oil [x2 gal]	1

NOTE: Refer to **Section 7, Table 7A** for kit content item identification, and additional replacement parts items.

IMPORTANT: If working in dusty or dirty conditions, reduce the recommended time intervals between servicing by half for engine and compressor oil change, and engine and compressor filter servicing.

PLEASE NOTE: WHEN ORDERING PARTS, INDICATE MACHINE SERIAL NUMBER.

REFERENCE:

Figure for Engine Routine Maintenance Component Locations

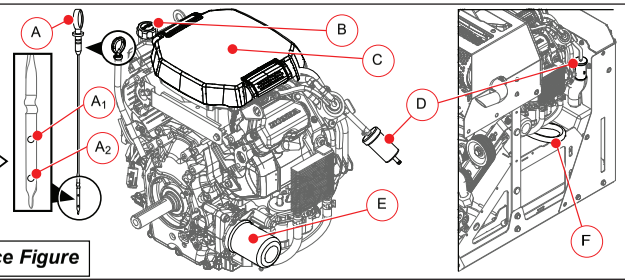

Engine Reference Figure

KEY	DESCRIPTION	KEY	DESCRIPTION
A	ENGINE OIL LEVEL GAUGE DIPSTICK	C	ENGINE AIR FILTER HOUSING
A_1	OIL LEVEL MARK - FULL	D	ENGINE FUEL FILTER
A_2	OIL LEVEL MARK - EMPTY	E	ENGINE OIL FILTER
B	ENGINE OIL FILL PORT/CAP	F	ENGINE OIL DRAIN HOSE

NOTE: The figure shown at left is for reference to the engine's main routine maintenance check points. For full instruction on engine maintenance, please refer to the Engine Operation Manual.

KEY	TASK DESCRIPTION						ACTION TO TAKE / REFERENCE
19.5	Compressor full service change: oil filter, air filter, oil separator: AIR FILTER *(continued)*					■	**PROCEDURE:** Refer to key **#13A** or **#13B** for procedure on replacing the compressor air filter element.
20	Change drive belt					■	**PROCEDURE:** Refer to ***Section 5.4.1, Adjusting the Belt Tension*** in **Section 5, Maintenance**. Order replacement belt **no. 281454** for 80 CFM units; order replacement belt **no. 282725** for 55,60 & 70 CFM units.
21	Change engine air pre-filter, and filter elements					■	**REFERENCE:** • Refer to the ***Engine Reference Figure*** at the top of the page. **PROCEDURE:** Refer to the Engine Operation Manual for engine air filter inspection procedure. Should the filter(s) need replacement, order engine pre-filter replacement **no. 281452-02**, and engine air filter replacement **no. 281452-03**. Note that the full Engine Service Kit **no. KIT1482** also comes with both a pre-filter and air filter replacement.
22	Replace engine spark plugs					■	**PROCEDURE:** Refer to the Engine Operation Manual for spark plug information.

Continued on next page

TABLE 5C: VIPER™ MAINTENANCE SCHEDULE INTERVALS

⚠WARNING

Before performing maintenance:

Shut down machine, relieve all system pressure and lock out all power, as per the Safety Section of this manual.

Always clearly tag the start-up instrumentation against accidental system start-ups during maintenance.

SERVICE INTERVAL- Refer to **IMPORTANT** under **Table 5B**

DAILY	BREAK-IN PERIOD First 50 Hours	ANNUALLY OR EVERY... 100 HOURS	200 HOURS	500 HOURS

TABLE 5D: ROUTINE MAINTENANCE REPLACEMENT KITS - COMPRESSOR

KEY NO.	DESCRIPTION	QTY
KIT1482	Kit, Engine Service - filters [air pre-cleaner, air, oil, fuel], and motor oil [x2 qt]	1
KIT1212	Kit, Compressor First 50 Hour Service - Vanguard™ oil [x2 gal], oil filter	1
KIT1221	Kit, Compressor 500 Hour Service - **"Type A"** air filter, oil & separator elements, Vanguard™ oil [x2 gal]	1
KIT1483	Kit, Compressor 500 Hour Service - **"Type B"** air filter, oil & separator elements, Vanguard™ oil [x2 gal]	1

NOTE: Refer to **Section 7, Table 7A** for kit content item identification, and additional replacement parts items.

IMPORTANT: If working in dusty or dirty conditions, reduce the recommended time intervals between servicing by half for engine and compressor oil change, and engine and compressor filter servicing.

PLEASE NOTE: WHEN ORDERING PARTS, INDICATE MACHINE SERIAL NUMBER.

REFERENCE:

Figure for Engine Routine Maintenance Component Locations

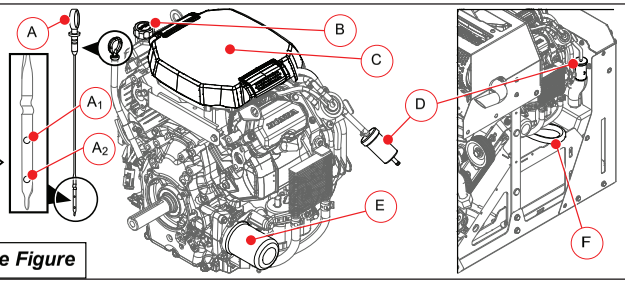

Engine Reference Figure

KEY	DESCRIPTION	KEY	DESCRIPTION
A	ENGINE OIL LEVEL GAUGE DIPSTICK	C	ENGINE AIR FILTER HOUSING
A_1	OIL LEVEL MARK - FULL	D	ENGINE FUEL FILTER
A_2	OIL LEVEL MARK - EMPTY	E	ENGINE OIL FILTER
B	ENGINE OIL FILL PORT/CAP	F	ENGINE OIL DRAIN HOSE

NOTE: The figure shown at left is for reference to the engine's main routine maintenance check points. For full instruction on engine maintenance, please refer to the Engine Operation Manual.

KEY	TASK DESCRIPTION						ACTION TO TAKE / REFERENCE
23	Inspect belt system tensioners					■	**PROCEDURE:** Refer to ***Section 5.4.1, Adjusting the Belt Tension*** in **Section 5, Maintenance**. If belt needs to be replaced, refer to **Section 5.4.1.1** to determined proper belt to order. If the tensioner is broken please contact the Vanair® Service Department.

VANAIR® MANUFACTURING, INC.
A Lincoln Electric Company
(844) VAN-SERV • vanair.com

Continued from page 5 - 2...

5.4 PARTS REPLACEMENT AND ADJUSTMENT PROCEDURES

5.4.1 ADJUSTING THE BELT TENSION

Drive belt tension should be maintained to avoid premature belt wear, poor performance due to belt slippage, or damage to engine and/or compressor. The Viper™ Gas Compressor Package has an idler pulley assembly with a tensioning device to set the proper belt tension.

5.4.1.1 CHANGING THE BELT

NOTE

Order replacement belt as follows:

- **For 80 CFM units order Vanair® replacement belt no. 281454.**
- **For 55, 60 & 70 CFM units order Vanair® replacement belt no. 282725.**

1. Loosen but do not remove the idler assembly anchor nuts **[G]**.
2. Using a 9/16” wrench (ratcheting if available) loosen the de-tension nut **[E]** and spin it down to the tension bracket **[F]**. Using the same wrench, tighten nut down until the belt is loose/removable. Tighten top idler assembly anchor nut **[G]**.
3. Remove worn belt and replace with new belt.
4. Loosen top anchor nut **[G]**. Back out the de-tension nut **[E]**, ensuring that the belt is properly seated in the grooves of idlers and pulleys.
5. Press down on the top ilder pulley **[H_1]** one inch, and release to allow spring to reapply proper tension force.
6. Tighten both idler assembly anchor nuts **[G]**.

5.4.1.2 ADJUSTING BELT TENSION

1. Using a 9/16” wrench (ratcheting if available) Loosen both idler assembly anchor nuts **[G]**.

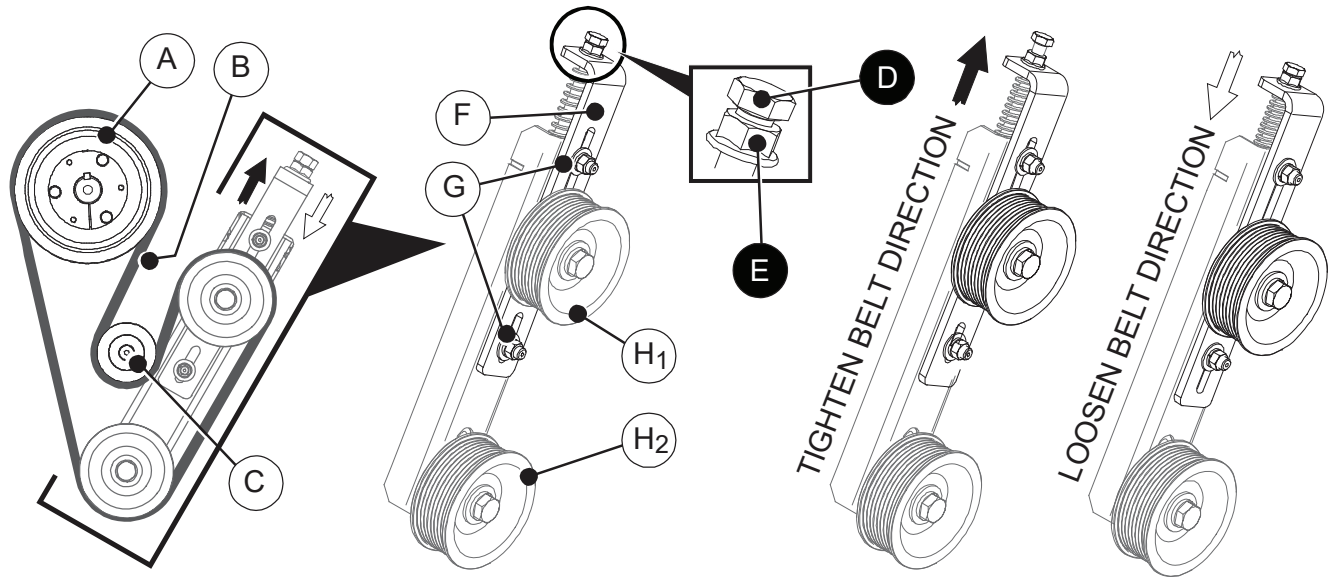

KEY	DESCRIPTION	KEY	DESCRIPTION	KEY	DESCRIPTION
A	ENGINE DRIVE SHEAVE	D	RETAINING BOLT [I]	G	IDLER ASSEMBLY ANCHOR NUTS
B	DRIVE BELT	E	DE-TENSION NUT	H_1	TOP IDLER PULLEY - ADJUSTABLE
C	COMPRESSOR DRIVE SHEAVE	F	TENSIONER ASSEMBLY SLIDE PLATE	H_2	BOTTOM IDLER PULLEY - FIXED

[I] **IMPORTANT:** The retaining bolt should not be adjusted - **DO NOT** adjust the retaining bolt position.

Figure 5-1: Tension Assembly

2. Press down on the top ilder pulley **[H_1]** one inch, and release to allow spring to reapply proper tension force.
3. Tighten both idler assembly anchor nuts **[G]**.

5.5 SERVICING THE SYSTEM FUSES AND CIRCUIT BREAKER

Refer to the Engine Operation Manual for detailed maintenance and replacement procedures for the engine.

5.6 STORAGE AND INTERMITTENT USE

5.6.1 INTERMITTENT USE

If the unit is not used very regularly always treat the fuel with a fuel stabilizer.

Check all belts and hoses for signs of deterioration such as visible surface cracks, stiffness or discoloration.

NOTE

In order to ensure that the compressor is maintained in working order during prolonged periods of non-use, refer to Section 4.7.8.2, Infrequent Use, for steps to take to avoid the condition of oil emulsification.

5.6.2 LONG TERM STORAGE

Disconnect the battery cable that is connected to the negative (-) side of the battery.

Cover the unit with a tarp or plastic to prevent the accumulation of dust, but leave the bottom open for air circulation.

Fill the fuel tank with fuel and fuel stabilizer to prevent moisture build-up in the tank.

SECTION 6: TROUBLESHOOTING

6.1 GENERAL INFORMATION

This section contains symptoms and usual causes for the most common types of problems that may occur. All available data concerning the trouble should be systematically analyzed before undertaking any repairs or component replacement.

A visual inspection is worth performing for almost all problems and may avoid unnecessary additional damage to the machine. The procedures which can be performed in the least amount of time and with the least amount of removal or disassembly of parts should be performed first.

⚠ WARNING

Before starting, performing maintenance, or replacing parts, relieve the entire system pressure by opening a service valve, which will vent all pressure to the atmosphere.

Although Vanair® strives to anticipate situations that may occur during the operation life of the machine package, the Troubleshooting Guide may not cover all possible situations. Be aware that additional troubleshooting information may be found in other sources, such as the Engine Operation Manual. Should the situation remain unresolved after exhausting available sources, contact the Vanair® Service Department at:

Vanair® Manufacturing, Inc.
A Lincoln Electric Company
10896 West 300 North
Michigan City, IN 46360
Telephone: (800) 526-8817
Service: (844) VAN-SERV
service@vanair.com
sales@vanair.com
vanair.com

This section contains symptoms and usual causes for the most common types of problems that may occur. All available data concerning the trouble should be systematically analyzed before undertaking any repairs or component replacement.

A visual inspection is worth performing for almost all problems and may avoid unnecessary additional damage to the machine. The procedures which can be performed in the least amount of time and with the least amount of removal or disassembly of parts should be performed first.

Although Vanair® strives to anticipate situations that may occur during the operation life of the machine package, the Troubleshooting Guide may not cover all possible situations. Should the situation remain unresolved after exhausting available sources, contact the Vanair® Service Department, with the machine serial number readily available (refer to ***Figure 6-1***).

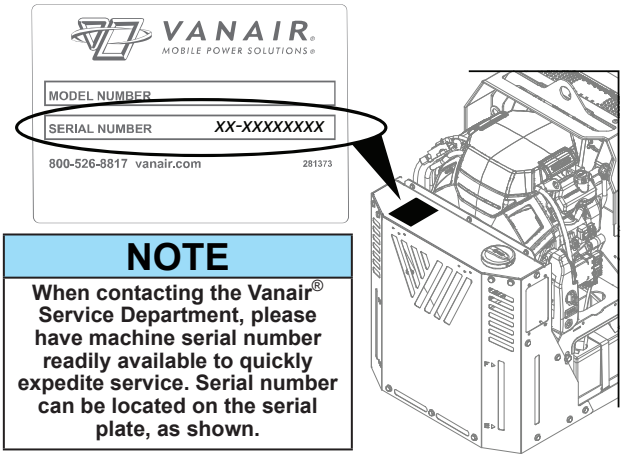

NOTE

When contacting the Vanair® Service Department, please have machine serial number readily available to quickly expedite service. Serial number can be located on the serial plate, as shown.

Figure 6-1: Machine Serial Plate/Serial Number Location

TABLE 6A: TROUBLESHOOTING GUIDE

Fault/Malfunction	Possible Cause	Corrective Action
Failure to Start	No Fuel	Fill if necessary.
	Pinched Fuel Line	Replace or reroute.

Continued on next page

TABLE 6A: TROUBLESHOOTING GUIDE

Fault/Malfunction	Possible Cause	Corrective Action
Failure to Start (continued)	Plugged Fuel Filter	Replace fuel filter / fuel filter element.
	Low Battery Voltage	Recharge or replace.
		Loose connections-tighten.
		Dirty connections-clean.
	Plugged Air Filter	Replace air filter element.
	Defective Oil Pressure Switch	Check continuity-replace.
	Defective Air Temperature Switch	Check continuity-replace.
	Blown Fuse	Check continuity-replace.
	Poor ground connection	Check and clean/renew.
	Engine problems	Refer to Engine Operation Manual.
Compressor Shuts Down with Air Demand	No Fuel	Fill if necessary.
	Compressor Temperature Switch Opening	Low oil level; add oil.
		Restricted cooling air intake; clean-reposition machine.
		Fan not operating; check ground, check fan switch.
	Plugged Oil Filter	Replace oil filter element.
	Dirty Cooler Core	Clean.
	Contaminated Cooler Core	Remove and clean.
	Defective Engine Oil Pressure Switch	Replace.
Compressor will Not Build Up Pressure	Air Demand Too Great	Check for leaks/correct.
		Too much air demand.
	Air Filter Plugged	Check and replace air filter element, if needed.
	Engine Does Not Speed Up	Engine governor stuck or damaged - free and/or contact Vanair .
	Belts Slipping	Readjust.
Compressor Over-Pressures	Leak in Air Control Line	Check and correct.
	Inlet Valve Stuck	Free or replace, if necessary.
	Restriction in Control Line	Dirt or ice, clean/free up.
	Defective Safety Valve	Replace.
	Plugged Coalescer	Replace coalescer element.
Insufficient Air Delivery	Plugged Air Filter	Replace air filter element.
	Plugged Coalescer	Replace coalescer element.
	Inlet Valve Stuck	Free or replace.
	Belts Slipping	Readjust.
Oil Carryover	Oil Level Overfull	Drain to correct level.
	Plugged Oil Scavenge Orifice	Remove and clean.
	Scavenge Return Line Kinked	Replace/re-route.
	Check Valve Stuck	Replace.
	Defective Coalescer	Replace coalescer element.
	Discharge Pressure Too Low	Review air usage.
		Check pressure regulator setting.

Continued on next page

TABLE 6A: TROUBLESHOOTING GUIDE

Fault/Malfunction	Possible Cause	Corrective Action
Sleep Mode Does Not Activate	Air Leak in Discharge Minimum Pressure Valve	Check valve. Replace if necessary.
System Does Not Activate From Sleep Mode with Demand	System in Hibernation Mode	Power cycle the machine. Contact Vanair Service Department for additional information.
Compressor Overheating	Insufficient Oil	Check level and top up (**DO NOT** overfill).
	Restricted Cooling Air Flow	Reposition machine; remove restrictions to air flow.
	Fan Not Operating	Check ground connection.
		Check circuit breaker.
		Check for shorted wires.
		Check fan motor.
	Plugged Oil Filter	Replace oil filter element.
	Cooler Core Plugged	Clean.
	Pressure Set Too High	Readjust.
	Restricted Cooling Air Flow	Reposition machine.
	Contaminated Cooler Core	Remove and clean.
System Retains Pressure After Shutdown	No Signal to Blowdown Valve	Check solenoid line for leak/fold.
	Blowdown Valve Plugged	Inspect; clean if necessary.
	Plugged Coalescer Element	Replace.
Improper Control Operation	Engine Does Not Speed Up	Cylinder stuck, replace.
		Operating pressure too high.
		Fuel filter partly plugged.
	Engine Does Not Slow Down	Faulty pressure sensor - replace.
	Faulty Pressure Sensor	Replace.
Engine Overheating [I]	Low Oil Level	Fill acceptable level; **DO NOT** overfill.
	Oil Filter Plugged	Replace oil filter element.
	Restricted Cooling Air In/Out	Clean engine intake grill.
		Too close to obstruction; move machine or remove obstruction.
		Engine oil cooler plugged; inspect/clear.
	Compressor Pressure Too High	Readjust.

[I] Consult Engine Manual for additional engine information.

6.2 EXTREME CONDITION OPERATION

When operating in extreme cold or hot conditions, in the presence of high humidity, or at a high altitude, extra attention should be given to any indication that could lead to a serious problem. Engine power and compressor air output will be reduced at high altitude or hot ambient temperatures.

Machine review and maintenance check schedules should be more frequent than the normal suggestions given in the **Maintenance Schedule Tables** (**Table 5A**, and **Table 5B** in **Section 5**).

Become acquainted with the situation-adjusted operation approaches given in this section before operating the power system package in any type of extreme ambient condition. For additional operation information consult the Engine Operation Manual, or visit the engine manufacturer's web site given in that manual.

Refer to ***Figure 6-2*** to best match the engine manufacturer's recommendation for oil use conditions of operation.

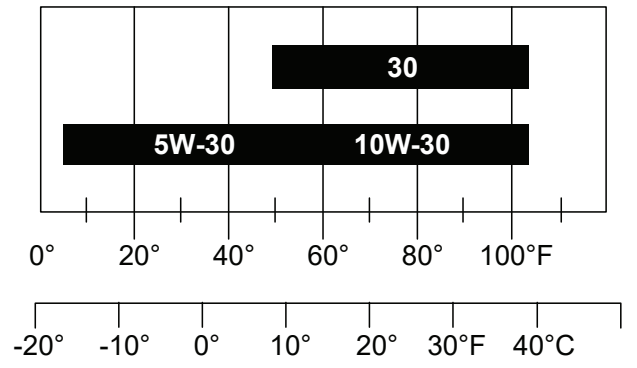

"SAE 10W-30 is recommended for general use. Other viscosities shown in the chart may be used when the average temperature in your area is within the indicated range."

- Honda Engine Operation Manual

Figure 6-2: Engine Oil Viscosity Condition Chart

6.2.1 HIGH MOISTURE CONDITION: EMULSIFICATION OF OIL IN ROTARY SCREW COMPRESSOR SYSTEMS

If machine is operating in a high moisture environment, water contamination may persists after following the regular preventative maintenance schedule and standard operating procedures.

Refer to ***Section 4.7.8***, in **Section 4**, which addresses start-up concerns for high moisture conditions.

6.2.2 COLD WEATHER OPERATION

Consult the information in **Table 6.2A** for preventative and/or repair measures. The Gas Viper™ can be more difficult to start in cold weather. Once the engine is started, the air density becomes larger and the intake efficiency also becomes higher. More output can be expected in cold areas. When the temperature is very low, extra care must be taken regarding fuel and oil changes in their viscosity, freezing of water contained in the piping, or of water adhering on the filter.

6.2.3 HIGH TEMPERATURE OPERATION

Consult the information in **Table 6.2B** for preventative and/or repair measures. Reduce load duty

TABLE 6.2A - COLD WEATHER OPERATION

Symptom	Cause	Prevention / Corrective Action
Water freezes in the fuel line Lubrication oil viscosity increases	**WATER** Water in the fuel can freeze at temperatures below 32°F (0°C), blocking fuel lines. At an extremely cold temperature, the viscosity of lubrication oil may increase and the torque of starter may exceed its permissible value, hindering proper starting.	• Park the vehicle or equipment indoors when not in use. • Check the fuel filter regularly to insure that it contains no water. • Maintain the battery; this will make it easier to start. • In below zero temperatures a fuel line deicer product may need to be used. • The oil recommendation of SAE 10W-30 is suitable for use from -40°F to 110°F (-40°C to 43°C). • The standard recommendation of 5W-30 engine oil is suitable for temperatures down to -4°F (-20°C). If temperatures are consistently below 30°F (-1°C), it is recommended that 5W-30 oil be used. If temperatures are below -25°F (-32°C), a high-performance, fully synthetic oil, such as AMSOIL 5W-30 should be used which is suitable to temperatures of -55°F (-48°C). • For additional engine precautions, consult the Engine Operation Manual. • Vanair® recommends installation of the cold weather heater option kit. Consult **Sections 7.9, 7.12** and **7.14** for cold weather kit option. • Keep the fuel tank full to prevent condensation from forming inside the tank and lessen the chances of water getting in the fuel line.

TABLE 6.2B - HIGH TEMPERATURE OPERATION		
Symptom	**Cause**	**Prevention / Corrective Action**
Overheating/high compartment temperatures Diminished engine performance	High ambient temperatures, confined spaces, soundproof cases and other reasons. Among these the most important factor is the temperature of the intake and cooling air.	• Extra care should be taken to keep the engine and air compressor clean and to not restrict the air flow around the unit. • Consult the Engine Operation Manual for fuel, lubrication oil and cooling requirements under extreme temperatures. • At the minimum, all coolers, including air passage ways around the coolers, should be free of debris and dirt. The fan, driven by the engine, is designed to run continuously to assure a constant flow of cooling air. • If high ambient overheating occurs, reduce the duty cycle. The operator should be aware that high temperatures can influence engine performance, which can directly effect some machine function capacity outputs.

cycle to less than 60% when operating in ambient temperatures above 104°F (40°C).

Extra care should be taken to keep the engine and air compressor clean and to not restrict the air flow around the unit. Consult the Engine Operator's Manual for fuel, lubrication oil and cooling requirements under extreme temperatures.

When operating the machine in high temperature areas, precautions should be taken to prevent overheating. At the minimum, all coolers, including air passage ways around the coolers, should be free of debris and dirt.

The operator should be aware that high temperatures can influence engine performance, which can directly effect some machine function capacity outputs.

6.2.4 HIGH DUST CONTENT OPERATION

Consult the information in **Table 6.2C** on page 6 - 6**.** For preventative and/or repair measures. When the machine is to be used in continuously dusty environments, special care must be taken with the engine's air cleaner, compressor air cleaner, and compressor oil cooler.

6.2.5 HIGH ALTITUDE OPERATION

Engine horsepower will decrease by 3.5% for every 1,000 feet above sea level. At high altitude overall unit performance will deteriorate, and care will need to be taken not to overload the engine.

Table 6.3 lists the fault codes along with their corresponding descriptions.

TABLE 6.2C - HIGH DUST CONTENT OPERATION		
Symptom	**Cause**	**Prevention / Corrective Action**
Overheating System contamination Stalling	Machine components exposed to frequent or constant dust interaction, can result in diminished system performance, or machine cessation.	• The intake air must be cleaned with the air cleaner—inspect the air filter frequently for dust build-up and replace as needed. • Ensure that the oil cooler fins are kept clean to prevent overheating. • If the machine is not being used for an extended period of time, an additional precaution, such as covering the machine with a tarp, will help to keep the inside of the machine free of dust particle accumulation. • For extreme cases of high dust content environments, machine fluids may need to be replaced at more frequent intervals. Adjust maintenance schedule accordingly.

BLANK PAGE

SECTION 7: ILLUSTRATED PARTS LIST

7.1 PARTS ORDERING INFORMATION

Part orders should be placed through the distributor from whom the unit was purchased. If for any reason parts cannot be obtained in this manner, contact the factory directly at the address or phone numbers below.

When ordering parts always indicate the Serial Number of the machine package. This can be obtained form the Bill of Lading for the machine package, or from the unit's serial number plate. See ***Figure 7-1*** for location of machine package serial plate. **Consult Table 7A: Recommended Spare Parts List** on the next page for a listing of replacement parts.

Vanair® Manufacturing, Inc.
A Lincoln Electric Company

10896 West 300 North
Michigan City, IN 46360
Telephone: (800) 526-8817
Service: (844) VAN-SERV
service@vanair.com
sales@vanair.com
vanair.com

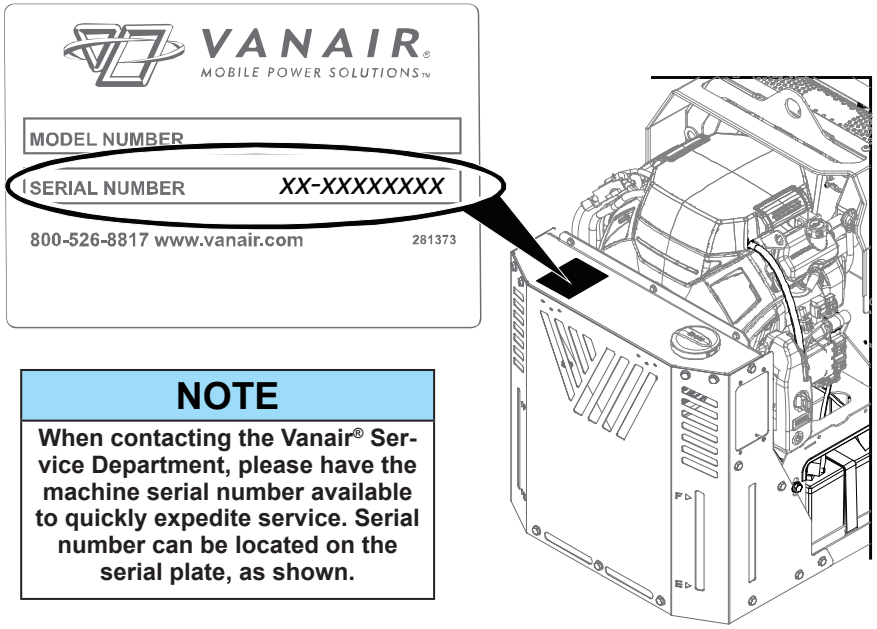

NOTE

When contacting the Vanair® Service Department, please have the machine serial number available to quickly expedite service. Serial number can be located on the serial plate, as shown.

Figure 7-1: Machine Serial Plate / Serial Number Location

TABLE 7A: RECOMMENDED SPARE PARTS LIST

FULL SERVICE MAINTENANCE KITS

KEY NO.	DESCRIPTION	ORDER NO.	QTY	KEY NO.	DESCRIPTION	ORDER NO.	QTY
1	Kit, Compressor Service - Initial 50 Hours (break-in period) [I]	KIT1212	1	4	Kit, Engine Service [V]	KIT1482	1
2	Kit, Compressor Service - 1 year / 500 Hours (**"Type A"** air filter - see ***Figure 7-2***) [II & IV]	KIT1221	1	5	Kit, Compressor Shaft Seal Replacement	KIT1257	1
3	Kit, Compressor Service - 1 year / 500 Hours (**"Type B"** air filter - see ***Figure 7-2***) [III & IV]	KIT1483	1				

INDIVIDUAL MAINTENANCE ITEMS

KEY NO.	DESCRIPTION	ORDER NO.	QTY	KEY NO.	DESCRIPTION	ORDER NO.	QTY
6	Filter, replacement element engine oil	281452-26	1	13	Filter, replacement element compressor air	266801	1
7	Filter, replacement element engine fuel	281452-01	1	14	Belt, serpentine replacement	[VI]	1
8	Pre-filter, replacement engine air	281452-02	1	15	Option, (Kit for) cold weather	032983	1
9	Filter, replacement element engine air	281452-03	1	16	Kit, engine valve	[VII]	1
10	Oil, engine motor (1 quart container)	276041	2 qts	17	Spark plug, replacement	[VIII]	1
11	Filter, replacement engine in-line fuel (75µ)	281452-01	1	18	Shaft, rocker arm	281452-31	1
12	Oil, compressor Vanair® Vanguard™ premium oil	264626-1GAL	1 gal	19	Kit, cold weather option	[IX]	1

[I] Compressor initial 50 hour break-in service kit **no. KIT1212** consists of: Vanair® Premium Synthetic Oil, by gallon (**no. 264626-1GAL**; x 2 [gallons]), and compressor oil filter (**no. 266801**).

[II] Compressor 500 hour service (with **"Type A"** air filter [***Figure 7-2***]) kit **no. KIT1221** consists of: Vanair® Premium Synthetic Oil, by gallon (**no. 264626-1GAL**; x 2 [gallons]), compressor oil filter (**no. 266801**), and air filter element (**no. 265546-004**). Refer to **Section 7.3**, item #26 to identify "Type B" air filter housing.

[III] Compressor 500 hour service (with **"Type B"** air filter [***Figure 7-2***]) kit **no. KIT1483** consists of: Vanair® Premium Synthetic Oil, by gallon (**no. 264626-1GAL**; x 2 [gallons]); compressor oil filter (**no. 266801**); air filter element (**no. 281414-01**); and air/oil separator spin-on element **no. 273080**. Refer to **Section 7.2**, item #12 to identify "Type A" air filter housing.

[IV] Use only Vanair® Vanguard™ Premium Synthetic Oil and Genuine Vanair® Parts. Substituting non-Vanguard™ Oil or non-genuine Vanair® filter components **WILL VOID THE COMPRESSOR WARRANTY!** Inspect and replace damaged components before operation. System fill capacity is approximately four (4) quarts.

[V] Engine service kit **no. KIT1482** consists of: Honda 10W-30 motor oil **no. 276041** (quantity of two quarts); fuel filter no. **281452-01**; air pre-filter element **no. 281452-02**, air filter element **no. 281452-03;** and engine oil filter (**no. 281452-26**).

[VI] Refer to footnote table shown in **Section 7.5, Frame and Drive**, for specifications on matching the proper: replacement belt, engine size and/or compressor type to the machine.

[VII] For kit component details consult the Vanair® Service Department.

[VIII] Some standard components such as spark plugs, may be obtained quicker and more economically from local sources such as an Auto Supply Store, etc.

[IX] Refer to **Sections 7.9** , **7.12** and **7.14** for details. For ordering information contact the Vanair® Service Department.

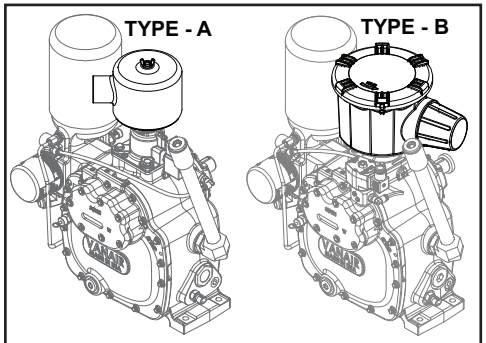

Figure 7-2: Compressor Air Filter Type Identifier

PLEASE NOTE: WHEN ORDERING PARTS, INDICATE MACHINE SERIAL NUMBER.

IMPORTANT

The above table listing contains items that require maintenance on a routine basis, and also those parts that may require maintenance over the course of the compressor package's performance schedule. Although this recommended list is pro-offered as a comprehensive guide to replacement parts, damage may occur to the machine beyond the scope of this listing.

Should any part of the compressor package that is not listed in Table 7A become damaged or inoperable, contact the Vanair® Service Department.

IMPORTANT

If additional spare parts are being stored for future use, ensure that they are stored in proper containers that allow for protection against contamination, and kept in a clean area of moderate temperature reading. For information on storing the machine package for periods of non-use, consult *Section 5.6.2, Long Term Storage*.

NOTES

7.2 COMPRESSOR AND PARTS - WITH "TYPE-A" AIR FILTER

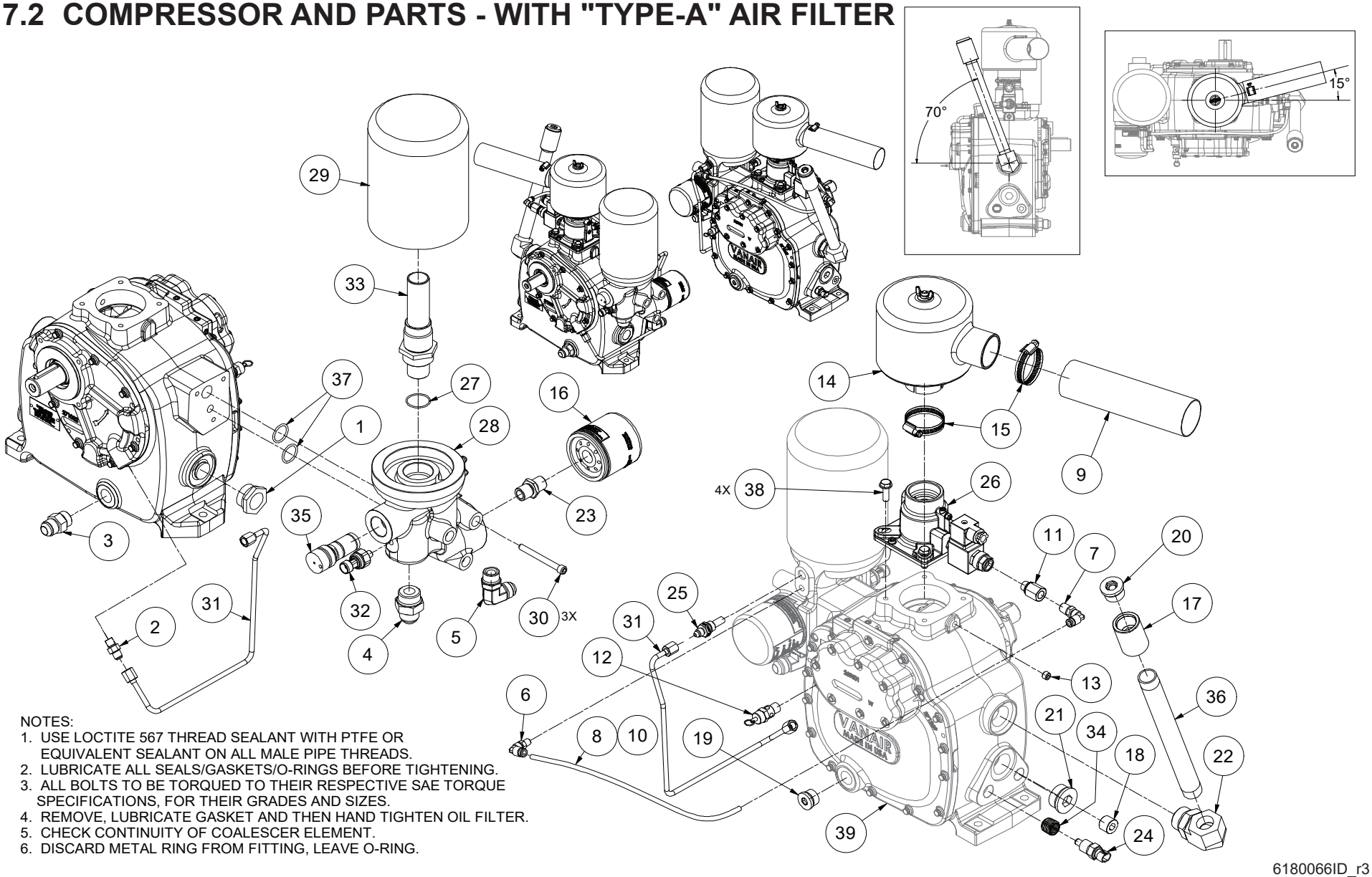

NOTES:
1. USE LOCTITE 567 THREAD SEALANT WITH PTFE OR EQUIVALENT SEALANT ON ALL MALE PIPE THREADS.
2. LUBRICATE ALL SEALS/GASKETS/O-RINGS BEFORE TIGHTENING.
3. ALL BOLTS TO BE TORQUED TO THEIR RESPECTIVE SAE TORQUE SPECIFICATIONS, FOR THEIR GRADES AND SIZES.
4. REMOVE, LUBRICATE GASKET AND THEN HAND TIGHTEN OIL FILTER.
5. CHECK CONTINUITY OF COALESCER ELEMENT.
6. DISCARD METAL RING FROM FITTING, LEAVE O-RING.

6180066ID_r3

VANAIR® MANUFACTURING, INC.
A Lincoln Electric Company
(844) VAN-SERV • vanair.com

7.2 COMPRESSOR AND PARTS - WITH "TYPE-A" AIR FILTER

ITEM	DESCRIPTION	PART NUMBER	QTY	ITEM	DESCRIPTION	PART NUMBER	QTY
1	SIGHTGLASS, O-RING TMBD 1 5/16”	250097-610	1	21	PLUG, SAE O-RING HOLLOW HEX #16	268081-010	1
2	CONNECTOR, O-RING 1/4 SAE x 1/4 JIC	260387-103	1	22	ELBOW, 90 DEG #16 MSAE x 3/4 FNPT	269071-009	1
3	CONNECTOR, O-RING 5/8 x 5/8 JIC	260387-109	1	23	CONNECTOR, OIL FILTER VANAIR ENCAPS	270037	1
4	CONNECTOR, O-RING 1-3/16 x 3/4 JIC PARKER	260387-143	1	24	THERMISTOR, TEMP 3/8” DELPHI	270916	1
5	ELBOW, 90 DEG #10 MJIC x #10 MSAE	260403-106	1	25	ORIFICE, STRNR 0.030 #6 MSAE X #4 MJIC	271054	1
6	ELBOW, 1/4T x 1/8P PUSH-ON	261309	1	26	VALVE, INLET 85/150 ADHD 12V	271701	1
7	ELBOW, 90 deg. PUSH ON 1/4T x 1/4P	261310	1	27	O-RING, VITON 1/16 DIA X 1.176 ID	272689	1
8	TUBING, PLASTIC 1/4 WHITE	261322	15.7”	28	MANIFOLD, AIR/OIL VMI80	272920	1
9	HOSE, FLEX AIR INLET 2 INCH BLACK	262705	7.3”	29	SEPARATOR, AIR/OIL SPIN ON	273080	1
10	LOOM, FLEX-GARD 1/4 ID 300 DEG. F.	262751	15.7”	30	CAPSCREW, HX SOC 5/16-18 X 3	273239	3
11	ADAPTER, FEMALE PIPE x BSPP 1/4	263748-004	1	31	TUBE, ASSY SCAVENGER LINE	281502	1
12	VALVE, RELIEF 200 PSI 1/4 NPT MALE	264232	1	32	TRANSDUCER, PRESSURE 1/8NPT 200PSI 5V	282860	1
13	PLUG, PIPE 1/8 NPT HOLLOW HEX	265065	1	33	ADAPTER, AIR/OIL SEPARATOR M42 X M39	282989	1
14	FILTER, AIR UNDERHOOD	265546	1	34	BUSHING BRS ADPTR 1/2 NPT M X 3/8 NPT F	283457	1
15	CLAMP, HOSE #28	265560	2	35	VALVE, MIN PRESS TEFLON	283477	1
16	FILTER, OIL 6” TANK	266801	1	36	NIPPLE, PIPE GALV 3/4 x 10	823112-100	1
17	ADAPTER, 3/4 NPT TO 1 1/16 SAE O-RING	267483	1	37	O-RING, VITON 0.924 I.D x 1.130 O.D x 3/32 PARKER 2-119	826502-119	2
18	PLUG, PIPE 1/2” NPT HOLLOW HEX	267942	1				
19	PLUG, SAE O-RING HOLLOW HEX #10	268081-007	1	38	SCREW, SER WASH 5/16-18 x 1	829705-100	4
20	PLUG, SAE O-RING HOLLOW HEX #12	268081-008	1	39	AIREND ASSY VSE075 ALDDSS000 EXT INLET	6170029	1

PLEASE NOTE: WHEN ORDERING PARTS, INDICATE MACHINE SERIAL NUMBER.

7.3 COMPRESSOR AND PARTS - WITH "TYPE-B" AIR FILTER

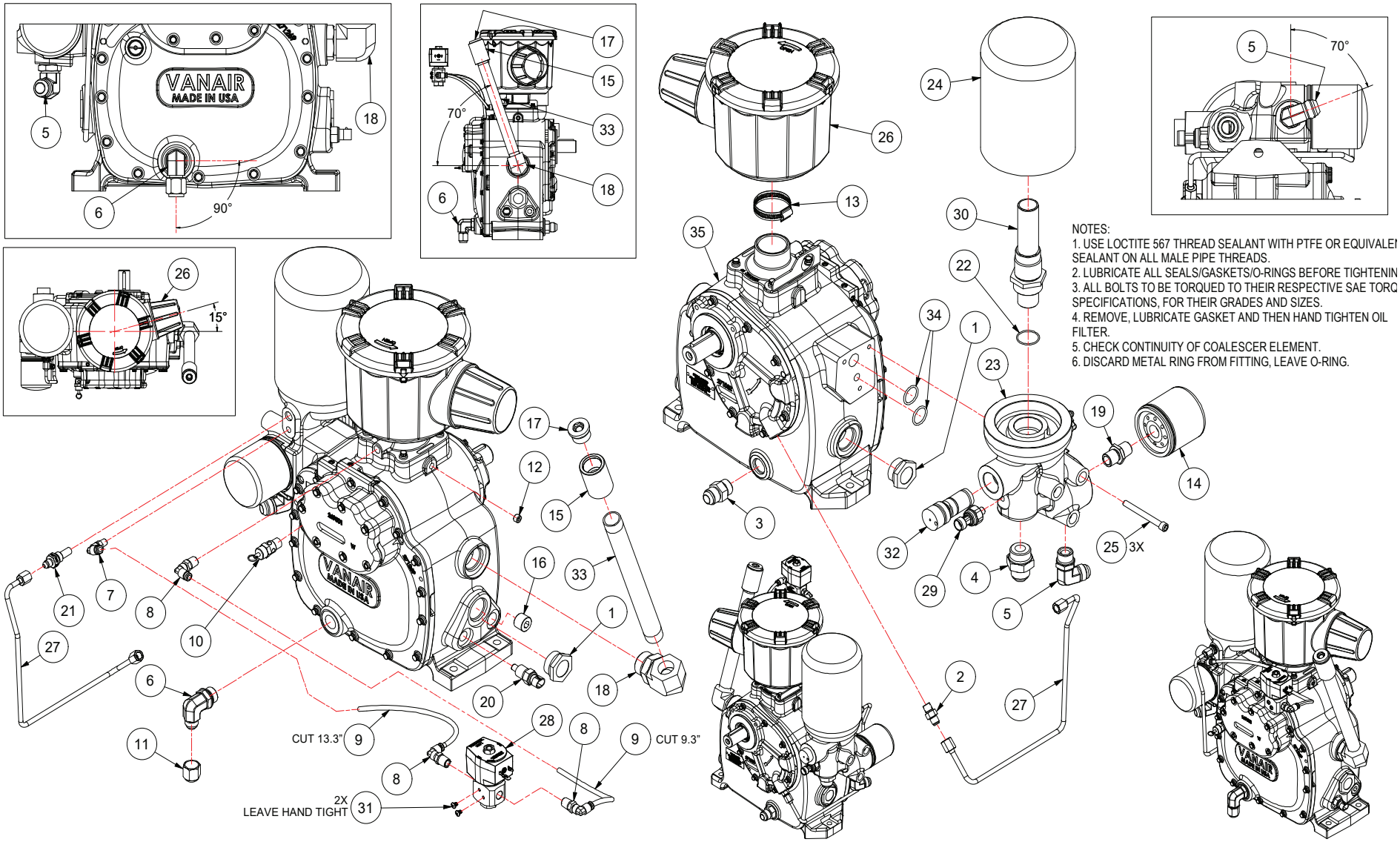

NOTES:
1. USE LOCTITE 567 THREAD SEALANT WITH PTFE OR EQUIVALEI SEALANT ON ALL MALE PIPE THREADS.
2. LUBRICATE ALL SEALS/GASKETS/O-RINGS BEFORE TIGHTENIN
3. ALL BOLTS TO BE TORQUED TO THEIR RESPECTIVE SAE TORQ SPECIFICATIONS, FOR THEIR GRADES AND SIZES.
4. REMOVE, LUBRICATE GASKET AND THEN HAND TIGHTEN OIL FILTER.
5. CHECK CONTINUITY OF COALESCER ELEMENT.
6. DISCARD METAL RING FROM FITTING, LEAVE O-RING.

6180049ID_r5_1

VANAIR® MANUFACTURING, INC.
A Lincoln Electric Company
(844) VAN-SERV • vanair.com

7.3 COMPRESSOR AND PARTS - WITH "TYPE-B" AIR FILTER

ITEM	DESCRIPTION	PART NUMBER	QTY	ITEM	DESCRIPTION	PART NUMBER	QTY
1	SIGHTGLASS, O-RING TMBD 1 5/16”	250097-610	2	19	CONNECTOR, OIL FILTER VANAIR ENCAPS	270037	1
2	CONNECTOR, O-RING 1/4 SAE x 1/4 JIC	260387-103	1	20	THERMISTOR, TEMP 3/8” DELPHI	270916	1
3	CONNECTOR, O-RING 5/8 x 5/8 JIC	260387-109	1	21	ORIFICE, STRAINER 0.030 #6 MSAE X #4 MJIC	271054	1
4	CONNECTOR, O-RING 1-3/16 x 3/4 JIC	260387-143	1	22	O-RING, VITON 1/16 DIA X 1.176 ID	272689	1
5	ELBOW, 90 DEG #10 MJIC x #10 MSAE	260403-106	1	23	MANIFOLD, AIR/OIL VMI80	272920	1
6	ELBOW, 90 DEG #8 MJIC x #10 MSAE	260403-112	1	24	SEPARATOR, AIR/OIL SPIN ON	273080	1
7	ELBOW, 1/4T x 1/8P PUSH-ON	261309	1	25	CAPSCREW, HX SOC 5/16-18 X 3	273239	3
8	ELBOW, 90 deg. PUSH ON 1/4T x 1/4P	261310	3	26	FILTER, AIR INTAKE	281414	1
9	TUBING, PLASTIC 1/4 WHITE	261322	1.87 ft	27	TUBE, ASSY SCAVENGER LINE	281502	1
10	VALVE, RELIEF 200 PSI 1/4 NPT MALE	264232	1	28	SOLENOID, 2 WAY NO 1/4”-18 NPT 12V	282710	1
11	CAP, FEMALE JIC 3/4-16 #8	264322-003	1	29	TRANSDUCER, PRESSURE 1/8NPT 200PSI 5V	282860	1
12	PLUG, PIPE 1/8 NPT HOLLOW HEX	265065	1	30	ADAPTER, AIR/OIL SEPARATOR M42 X M39	282989	1
13	CLAMP, HOSE #28	265560	1	31	SCREW, ROUND HEAD PHILLIPS #8-32 X 1/4 ZINC PLATED	283922-025	2
14	FILTER, OIL 6” TANK	266801	1				
15	ADAPTER, 3/4 NPT TO 1 1/16 SAE O-RING	267483	1	32	VALVE, MIN PRESS INTERNAL PARTS VMI80	286255	1
16	PLUG, PIPE 1/2” NPT HOLLOW HEX	267942	1	33	NIPPLE, PIPE GALV 3/4 x 10	823112-100	1
17	PLUG, SAE O-RING HOLLOW HEX #12	268081-008	1	34	O-RING, VITON 1.130 OD X 3/32	826502-119	2
18	ELBOW, 90 DEG #16 MSAEx 3/4 FNPT	269071-009	1	35	AIREND ASSY, VSE075DDSS000 INLET VLV	6170017	1

PLEASE NOTE: WHEN ORDERING PARTS, INDICATE MACHINE SERIAL NUMBER.

7.4 ENGINE AND DRIVE PARTS

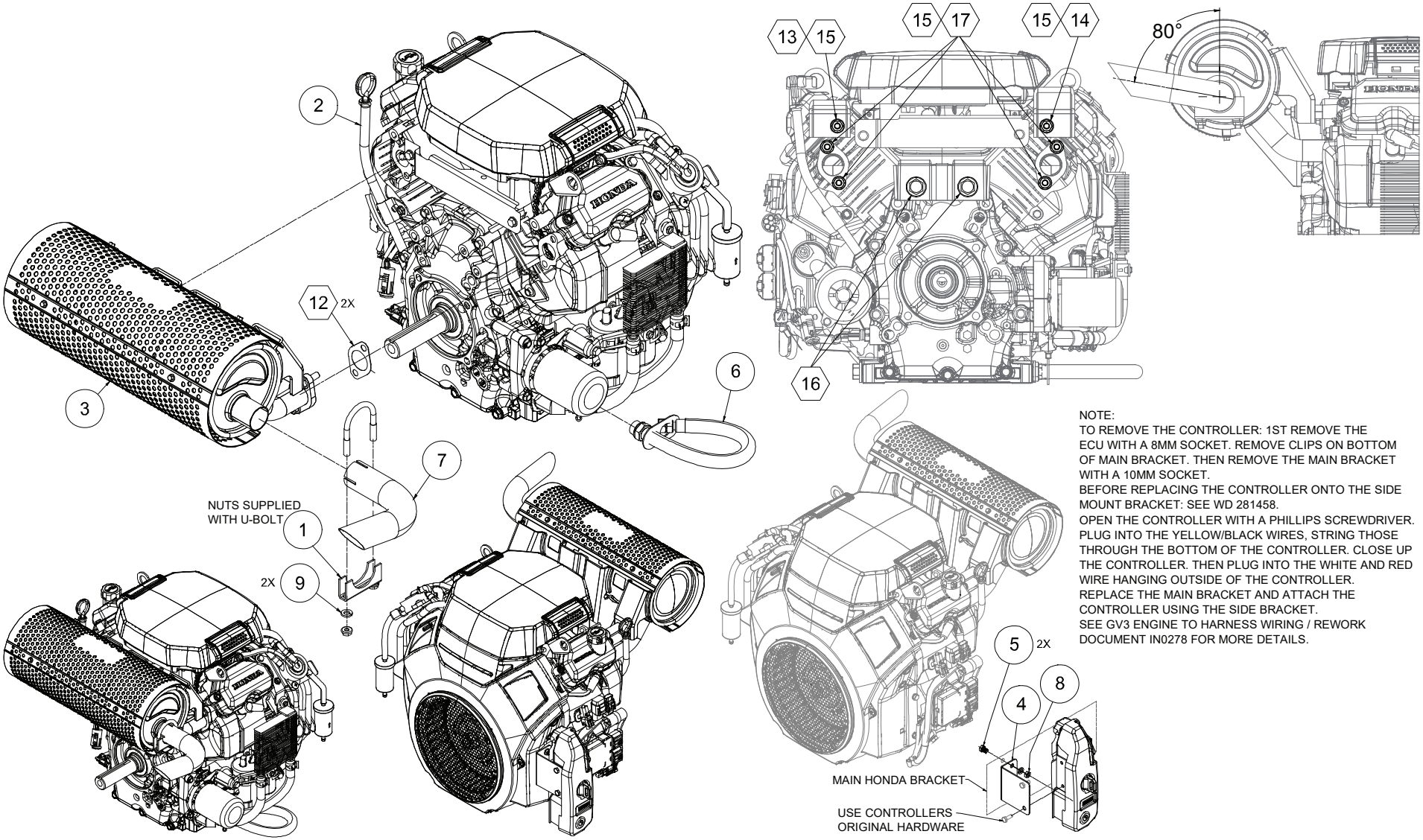

NOTE:
TO REMOVE THE CONTROLLER: 1ST REMOVE THE ECU WITH A 8MM SOCKET. REMOVE CLIPS ON BOTTOM OF MAIN BRACKET. THEN REMOVE THE MAIN BRACKET WITH A 10MM SOCKET.
BEFORE REPLACING THE CONTROLLER ONTO THE SIDE MOUNT BRACKET: SEE WD 281458.
OPEN THE CONTROLLER WITH A PHILLIPS SCREWDRIVER. PLUG INTO THE YELLOW/BLACK WIRES, STRING THOSE THROUGH THE BOTTOM OF THE CONTROLLER. CLOSE UP THE CONTROLLER. THEN PLUG INTO THE WHITE AND RED WIRE HANGING OUTSIDE OF THE CONTROLLER.
REPLACE THE MAIN BRACKET AND ATTACH THE CONTROLLER USING THE SIDE BRACKET.
SEE GV3 ENGINE TO HARNESS WIRING / REWORK DOCUMENT IN0278 FOR MORE DETAILS.

6100283ID_r3

VANAIR® MANUFACTURING, INC.
A Lincoln Electric Company
(844) VAN-SERV • vanair.com

7.4 ENGINE AND DRIVE PARTS

ITEM	DESCRIPTION	PART NUMBER	QTY
1	CLAMP, EXHAUST 1 1/2	262906-150	1
2	ENGINE, GAS HONDA IGX800 25HP EFI ETB	281452	1
3	MUFFLER, HONDA IGX800	281453	1
4	BRACKET, HONDA CONTROLLER	281524	1
5	CAPSCREW, M7-1.0 X 10MM	282032-010	2
6	HOSE, ENGINE OIL DRAIN 20MM IGX800	282054	1
7	TUBE, EXHAUST TIP GV3	282400	1
8	NUT, M7-1.0	282478	2
9	WASHER, LOCK 5/16	838505-078	2
10	WASHER, LOCK METRIC M7	838807-160	2
11	OIL, MOTOR 10W-30	844300-001	2 qt
12	GASKET, ENGINE EXHAUST HONDA IGX800	[I]	2
13	M8-1.25 STUD (LONG)	[II]	1
14	M8-1.25 STUD (SHORT)	[II]	1
15	M8-1.25 FLANGE NUT	[II]	6
16	M8-1.25 FLANGE SCREW	[II]	2
17	M8-1.25 STUD	[II]	4

[I] Supplied with engine.

[II] Supplied with muffler.

PLEASE NOTE: WHEN ORDERING PARTS, INDICATE MACHINE SERIAL NUMBER.

7.5 FRAME AND DRIVE - 1 OF 4

NOTE
1. REFERENCED SUBASSEMBLIES SHOWN AS: EXAMPLE - 1A, 2D, 3B.
2. USE LOCTITE 567 THREAD SEALANT WITH PTFE OR EQUIVALENT SEALANT ON ALL MALE PIPE THREADS.
3. ALL BOLTS TO BE TORQUED TO THEIR RESPECTIVE SAE TORQUE SPECIFICATIONS, FOR THEIR GRADES AND SIZES, UNLESS OTHERWISE SPECIFIED.

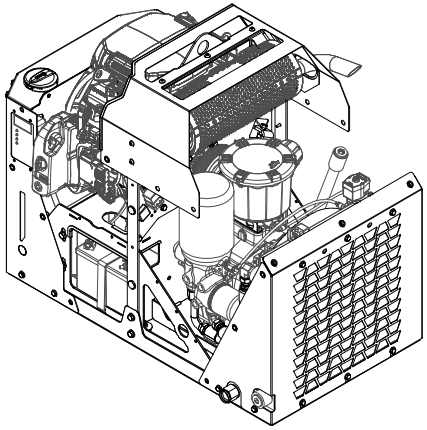

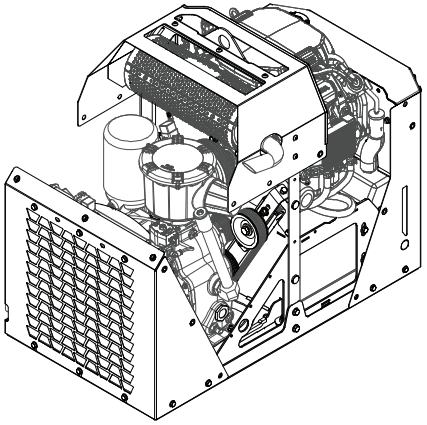

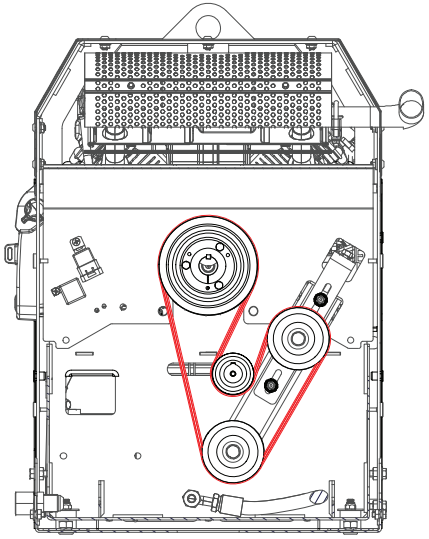

BELT VIEW
SCALE 5/16

STEP 1

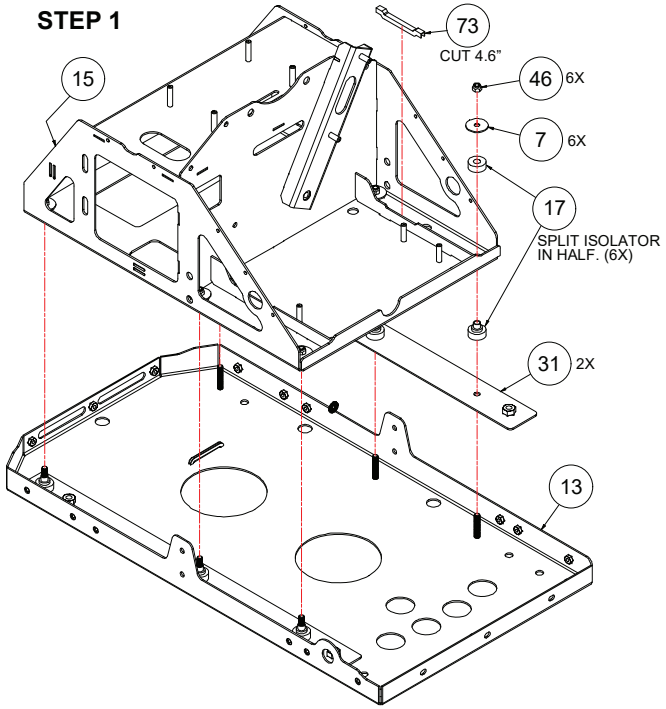

STEP 2

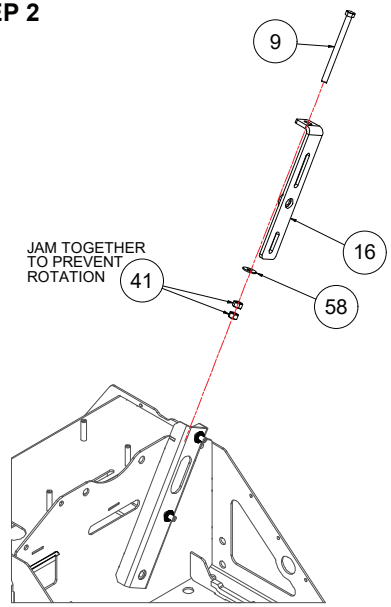

STEP 3

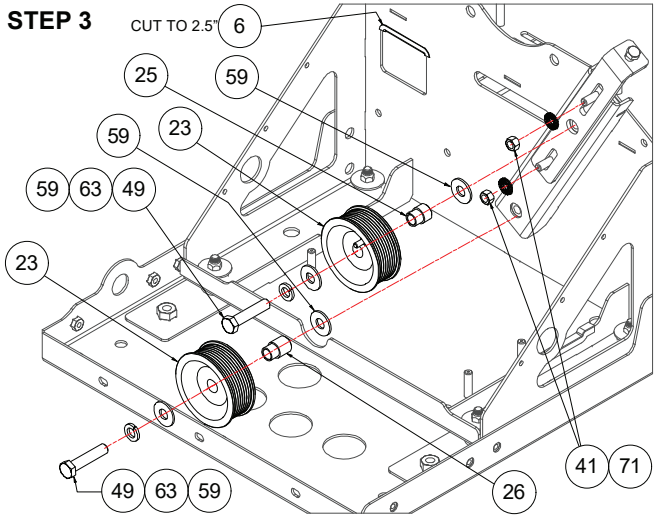

6030209ID_r9_1

VANAIR® MANUFACTURING, INC.
A Lincoln Electric Company
(844) VAN-SERV • vanair.com

7.5 FRAME AND DRIVE - 1 OF 4

ITEM	DESCRIPTION	PART #	QTY
1	CAPSCREW, HX GR8 5/16-24 x 1 GRD 5	650-216	2
2	ELECTRICAL SYSTEM, GV3	60603 I	1
3	ENGINE AND COMP DRIVE - OPTIONS	61003 II	1
4	COMPRESSOR - OPTIONS	61800 III	1
5	RELAY, NO/NC WTHRPRF w/RESISTOR	260246	1
6	TRIM-LOK,1/8 GROOVE	261228	4 ft
7	WASHER, SNUBBING RBBR MNT	265332	6
8	KEY, SQUARE 1/4 x 1/4 x 2 1/2	267639	1
9	BOLT, TAP 3/8-16 UNC-2B x 5.50 LG GR8 FL THRD	278133	1
10	TRIM-LOK, 1/8 GROOVE W/ 7/16 BULB	279712	9.3 in
11	RETAINER, SHEAVE GAS VIPER	281163	1
12	RECTIFIER, HONDA IGX800	281452-10	1
13	FRAME, BASE GV3	281460	1
14	BAIL, LIFT GV3	281461	1
15	SUPT, SUB-STRUCTURE GV3	281564	1
16	BRACKET, TENSIONER SLIDE	281685	1
17	MOUNT, RUBBER 280# AXIAL WHITE	281720	6
18	PANEL, COOLER GUARD/SUPT GV3	281847	1
19	PANEL, ENGINE MUFFLER SHIELD GV3	281869	1
20	HOSE, COMPR OIL CLR HOT GV3	281929	1
21	HOSE, COMPR OIL CLR COLD GV3	281930	1
22	BUMPER, SHEET METAL BLK	282074	4
23	SHEAVE, DRV K SCTN 8 GRV 3.54 OD	282269	2
24	SCREW, 5/16"-18 X 5/8 BTTN HD SKT BLK ZNC	282274-063	7
25	BUSHING, SHLDR ADPTR 0.75" IN L	282407	1
26	BUSHING, SHLDR ADPTR 1.00" IN L	282408	1
27	BAFFLE, ENGINE AIR OUT	282430	1
28	BAFFLE, ENGINE AIR IN	282431	1
29	BOLT, FLNG 5/16-18 X 5/8 BLK ZNC	282480-062	12
30	BOLT, FLNG 5/16-18 X 1 BLK ZNC	282480-100	9
31	PLATE, FRAME MOUNTING	282799	2
32	TRIM, SD BULB W/VNYL GRIP FITS 0.0625 EDGE, 0.375 HT	282861	1
33	CAP, GAS FILL NECK	282962	1
34	HEAT SHIELD, TOP MFLR GRD	283010-01	1
35	HEAT SHIELD, MFLR GRD EXHST SIDE	283010-02	1
36	HEAT SHIELD, MUFFLER GUARD	283010-03	1
37	RIVET, BLIND OPN END 5/32" GRIP RANGE 0.189"-0.378"	283912	4
38	HOSE, AIR DISCHARGE GV3	284894	1
39	PANEL, ENGINE SIDE GV3 (HD HNG)	285285	1
40	PANEL, FUEL FILL SUPT GV3 (HD HNG)	285287	0
41	NUT, HEX 3/8-16 YELLOW ZINC	825206-337	4
42	NUT, HEX FLANGE #12-24	825303-236	2
43	NUT, HEX FLANGE 1/4-20	825304-236	3
44	NUT, HEX FLANGE 5/16-18	825305-283	3
45	NUT, HEX FLANGE 3/8-16	825306-347	7
46	NUT, HEX LOCKING 3/8-16	825506-198	6
47	CAPSCREW, HEX GR5 5/16-18 x 1	829105-100	1
48	CAPSCREW, HEX GR5 7/16-14 x 0.75	829107-075	2
49	CAPSCREW, HEX GR5 1/2-13 x 2.25	829108-225	2
50	SCREW, SER WASH 5/16-18 x 0.625	829705-062	3
51	SCREW, SER WASH 5/16-18 x 1	829705-100	2
52	SCREW, SER WASH 3/8-16 x 0.625	829706-062	4
53	SCREW, SER WASH 3/8-16 x 0.75	829706-075	4
54	SCREW, MACHINE 1/4-20 x 1 1/2	830104-150	3
55	SCREW, MACHN #12-24X1/2	831603-050	2
56	WASHER, INTERNAL TOOTH 3/4"	837412-055	1
57	WASHER, FLAT 5/16	838205-071	2
58	WASHER, FLAT 3/8	838206-071	1
59	WASHER, FLAT 1/2	838208-112	4
60	WASHER, LOCK 1/4	838504-062	3
61	WASHER, LOCK 5/16	838505-078	2
62	WASHER, LOCK 7/16	838507-109	2
63	WASHER, LOCK 1/2	838508-125	2
64	BULKHEAD, 3/4 FNPT x #12 MJIC	862012-075	1
65	COOLING SYSTEM GV3	6020279	1
66	ENGINE & PARTS IGX800	6100283	1
67	FUEL TANK ASSY GV3	6140041	1
68	BUSHING, SDS, QD, 1 1/8DIA	DR85785Z	1
69	WASHER, 5/16ID X 21/32OD, 2 PC LKNG (NRD-LK)		1
70	NUT, HEX FLANGE 5/16-18	FA26142	9
71	WASHER, 3/8ID X 13/16OD NRD-LK	FA49463	2
72	GASKET, SEAL AND TRIM	PR35734	47.3 in
73	TRIM-LOK, 1/4 GROOVE	PR274358	10 in

PLEASE NOTE: WHEN ORDERING PARTS, INDICATE MACHINE SERIAL NUMBER.

I ELECTRICAL OPTIONS

ITEM #	DESCRIPTION	PART #	QTY
1A	ELECTRICAL SYSTEM, GV3	6060342	1
1B	ELEC SYS, GV3 CLD WTHR	6060387	1

II PULLEY/BELT OPTIONS

ITEM #	DESCRIPTION	MACHINE CFM	PART #	QTY
2A	DRV, ENG & CMPRSR PARTS GV3 80/100	6100308	1	1
2B	DRV, ENG & CMPRSR PARTS GV3 70/125	6100309	1	1
2C	DRV, ENG & CMPRSR PARTS GV3 60/150	6100311	1	1
2D	DRV, ENG & CMPRSR PARTS GV3 55/175	6100312	1	1

III COMPRESSOR OPTIONS

ITEM #	DESCRIPTION	PART #	QTY
3A	AIREND & ATT, VSE075DDSS000 INLT VLV VPR SOL	6180049	1
3B	AIREND & ATT, VSE075 ALDDSS000 EXT INLET VLV GV3	6180066	1

7.5 FRAME AND DRIVE - 2 OF 4

1. PLACE ENGINE ON FRAME, DO NOT TIGHTEN.
2. *IF ENGINE HAS COLD WEATHER OPTION, ROUTE WIRES DOWN TOWARD FUEL TANK /BATTERY, THROUGH SLOTS.
3. INSTALL BAFFLE, TIGHTEN LOWER BOLTS TO ENGINE FIRST.
4. TIGHTEN ENGINE MOUNTING NUTS.
5. ALL BOLTS TO BE TORQUED TO THEIR RESPECTIVE SAE TORQUE SPECIFICATIONS, FOR THEIR GRADES AND SIZES, UNLESS OTHERWISE SPECIFIED.

NOTE:
1. INSTALL COMPRESSOR BEFORE ENGINE.
2. INSTALL COMPRESSOR SHEAVE BEFORE MOUNTING.
3. ALIGN COMPRESSOR TO IDLERS.
4. ALL BOLTS TO BE TORQUED TO THEIR RESPECTIVE SAE TORQUE SPECIFICATIONS, FOR THEIR GRADES AND SIZES, UNLESS OTHERWISE SPECIFIED.
5. USE LOCTITE 567 THREAD SEALANT WITH PTFE OR EQUIVALENT SEALANT ON ALL MALE PIPE THREADS.

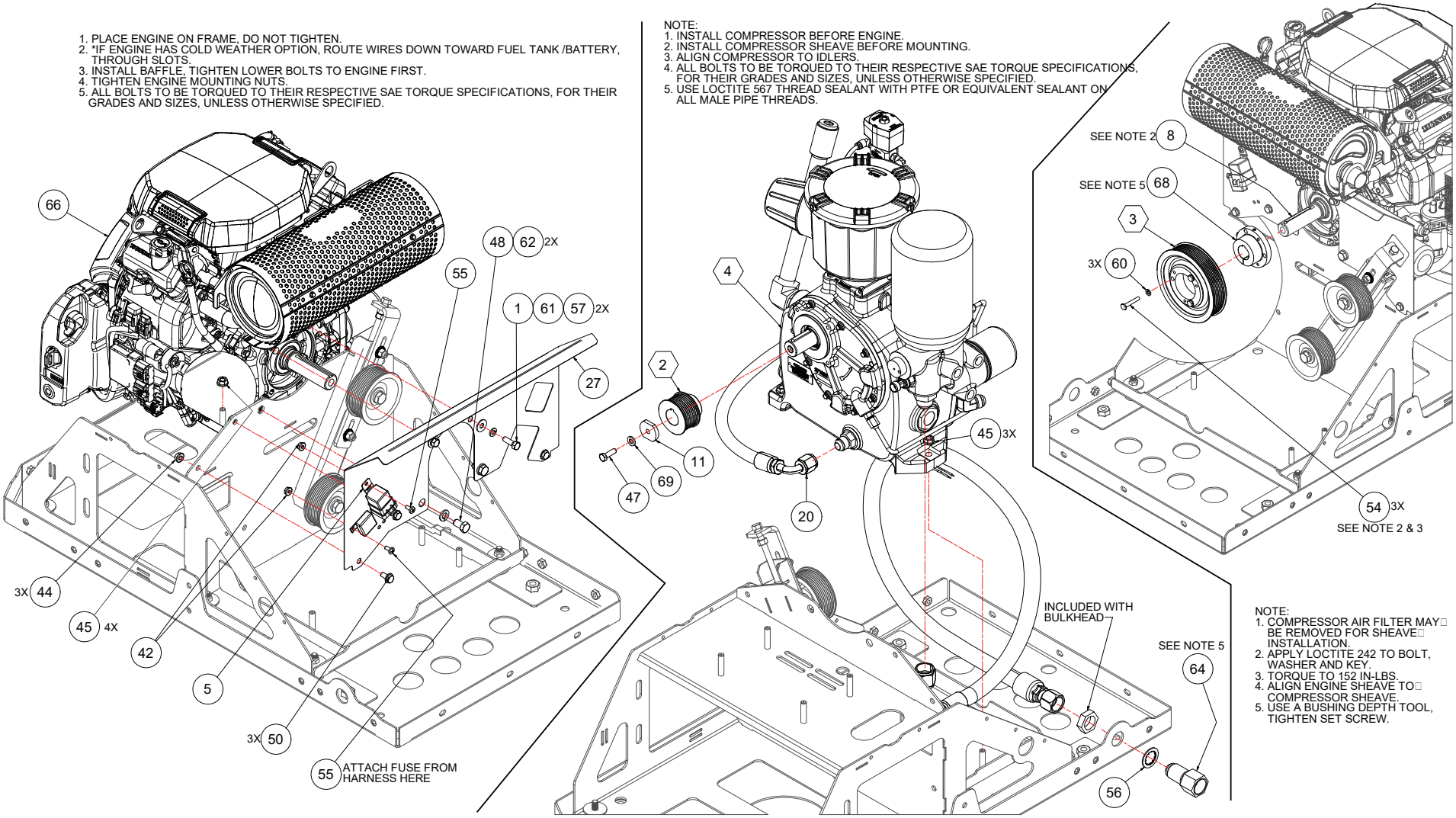

NOTE:
1. COMPRESSOR AIR FILTER MAY BE REMOVED FOR SHEAVE INSTALLATION.
2. APPLY LOCTITE 242 TO BOLT, WASHER AND KEY.
3. TORQUE TO 152 IN-LBS.
4. ALIGN ENGINE SHEAVE TO COMPRESSOR SHEAVE.
5. USE A BUSHING DEPTH TOOL, TIGHTEN SET SCREW.

6030209ID_r9_2

VANAIR® MANUFACTURING, INC.
A Lincoln Electric Company
(844) VAN-SERV • vanair.com

7.5 FRAME AND DRIVE - 2 OF 4

ITEM	DESCRIPTION	PART #	QTY
1	CAPSCREW, HX GR8 5/16-24 x 1 GRD 5	650-216	2
2	ELECTRICAL SYSTEM, GV3	60603 [I]	1
3	ENGINE AND COMP DRIVE - OPTIONS	61003 [II]	1
4	COMPRESSOR - OPTIONS	61800 [III]	1
5	RELAY, NO/NC WTHRPRF w/RESISTOR	260246	1
6	TRIM-LOK,1/8 GROOVE	261228	4 ft
7	WASHER, SNUBBING RBBR MNT	265332	6
8	KEY, SQUARE 1/4 x 1/4 x 2 1/2	267639	1
9	BOLT, TAP 3/8-16 UNC-2B x 5.50 LG GR8 FL THRD	278133	1
10	TRIM-LOK, 1/8 GROOVE W/ 7/16 BULB	279712	9.3 in
11	RETAINER, SHEAVE GAS VIPER	281163	1
12	RECTIFIER, HONDA IGX800	281452-10	1
13	FRAME, BASE GV3	281460	1
14	BAIL, LIFT GV3	281461	1
15	SUPT, SUB-STRUCTURE GV3	281564	1
16	BRACKET, TENSIONER SLIDE	281685	1
17	MOUNT, RUBBER 280# AXIAL WHITE	281720	6
18	PANEL, COOLER GUARD/SUPT GV3	281847	1
19	PANEL, ENGINE MUFFLER SHIELD GV3	281869	1
20	HOSE, COMPR OIL CLR HOT GV3	281929	1
21	HOSE, COMPR OIL CLR COLD GV3	281930	1
22	BUMPER, SHEET METAL BLK	282074	4
23	SHEAVE, DRV K SCTN 8 GRV 3.54 OD	282269	2
24	SCREW, 5/16"-18 X 5/8 BTTN HD SKT BLK ZNC	282274-063	7
25	BUSHING, SHLDR ADPTR 0.75" IN L	282407	1
26	BUSHING, SHLDR ADPTR 1.00" IN L	282408	1
27	BAFFLE, ENGINE AIR OUT	282430	1
28	BAFFLE, ENGINE AIR IN	282431	1
29	BOLT, FLNG 5/16-18 X 5/8 BLK ZNC	282480-062	12
30	BOLT, FLNG 5/16-18 X 1 BLK ZNC	282480-100	9
31	PLATE, FRAME MOUNTING	282799	2
32	TRIM, SD BULB W/VNYL GRIP FITS 0.0625 EDGE, 0.375 HT	282861	1
33	CAP, GAS FILL NECK	282962	1
34	HEAT SHIELD, TOP MFLR GRD	283010-01	1
35	HEAT SHIELD, MFLR GRD EXHST SIDE	283010-02	1
36	HEAT SHIELD, MUFFLER GUARD	283010-03	1
37	RIVET, BLIND OPN END 5/32" GRIP RANGE 0.189"-0.378"	283912	4
38	HOSE, AIR DISCHARGE GV3	284894	1
39	PANEL, ENGINE SIDE GV3 (HD HNG)	285285	1
40	PANEL, FUEL FILL SUPT GV3 (HD HNG)	285287	0
41	NUT, HEX 3/8-16 YELLOW ZINC	825206-337	4
42	NUT, HEX FLANGE #12-24	825303-236	2
43	NUT, HEX FLANGE 1/4-20	825304-236	3
44	NUT, HEX FLANGE 5/16-18	825305-283	3
45	NUT, HEX FLANGE 3/8-16	825306-347	7
46	NUT, HEX LOCKING 3/8-16	825506-198	6
47	CAPSCREW, HEX GR5 5/16-18 x 1	829105-100	1
48	CAPSCREW, HEX GR5 7/16-14 x 0.75	829107-075	2
49	CAPSCREW, HEX GR5 1/2-13 x 2.25	829108-225	2
50	SCREW, SER WASH 5/16-18 x 0.625	829705-062	3
51	SCREW, SER WASH 5/16-18 x 1	829705-100	2
52	SCREW, SER WASH 3/8-16 x 0.625	829706-062	4
53	SCREW, SER WASH 3/8-16 x 0.75	829706-075	4
54	SCREW, MACHINE 1/4-20 x 1 1/2	830104-150	3
55	SCREW, MACHN #12-24X1/2	831603-050	2
56	WASHER, INTERNAL TOOTH 3/4"	837412-055	1
57	WASHER, FLAT 5/16	838205-071	2
58	WASHER, FLAT 3/8	838206-071	1
59	WASHER, FLAT 1/2	838208-112	4
60	WASHER, LOCK 1/4	838504-062	3
61	WASHER, LOCK 5/16	838505-078	2
62	WASHER, LOCK 7/16	838507-109	2
63	WASHER, LOCK 1/2	838508-125	2
64	BULKHEAD, 3/4 FNPT x #12 MJIC	862012-075	1
65	COOLING SYSTEM GV3	6020279	1
66	ENGINE & PARTS IGX800	6100283	1
67	FUEL TANK ASSY GV3	6140041	1
68	BUSHING, SDS, QD, 1 1/8DIA	DR85785Z	1
69	WASHER, 5/16ID X 21/32OD, 2 PC LKNG (NRD-LK)		1
70	NUT, HEX FLANGE 5/16-18	FA26142	9
71	WASHER, 3/8ID X 13/16OD NRD-LK	FA49463	2
72	GASKET, SEAL AND TRIM	PR35734	47.3 in
73	TRIM-LOK, 1/4 GROOVE	PR274358	10 in

PLEASE NOTE: WHEN ORDERING PARTS, INDICATE MACHINE SERIAL NUMBER.

[I] ELECTRICAL OPTIONS

ITEM #	DESCRIPTION	PART #	QTY
1A	ELECTRICAL SYSTEM, GV3	6060342	1
1B	ELEC SYS, GV3 CLD WTHR	6060387	1

[II] PULLEY/BELT OPTIONS

ITEM #	DESCRIPTION	MACHINE CFM	PART #	QTY
2A	DRV, ENG & CMPRSR PARTS GV3 80/100	6100308	1	1
2B	DRV, ENG & CMPRSR PARTS GV3 70/125	6100309	1	1
2C	DRV, ENG & CMPRSR PARTS GV3 60/150	6100311	1	1
2D	DRV, ENG & CMPRSR PARTS GV3 55/175	6100312	1	1

[III] COMPRESSOR OPTIONS

ITEM #	DESCRIPTION	PART #	QTY
3A	AIREND & ATT, VSE075DDSS000 INLT VLV VPR SOL	6180049	1
3B	AIREND & ATT, VSE075 ALDDSS000 EXT INLET VLV GV3	6180066	1

7.5 FRAME AND DRIVE - 3 OF 4

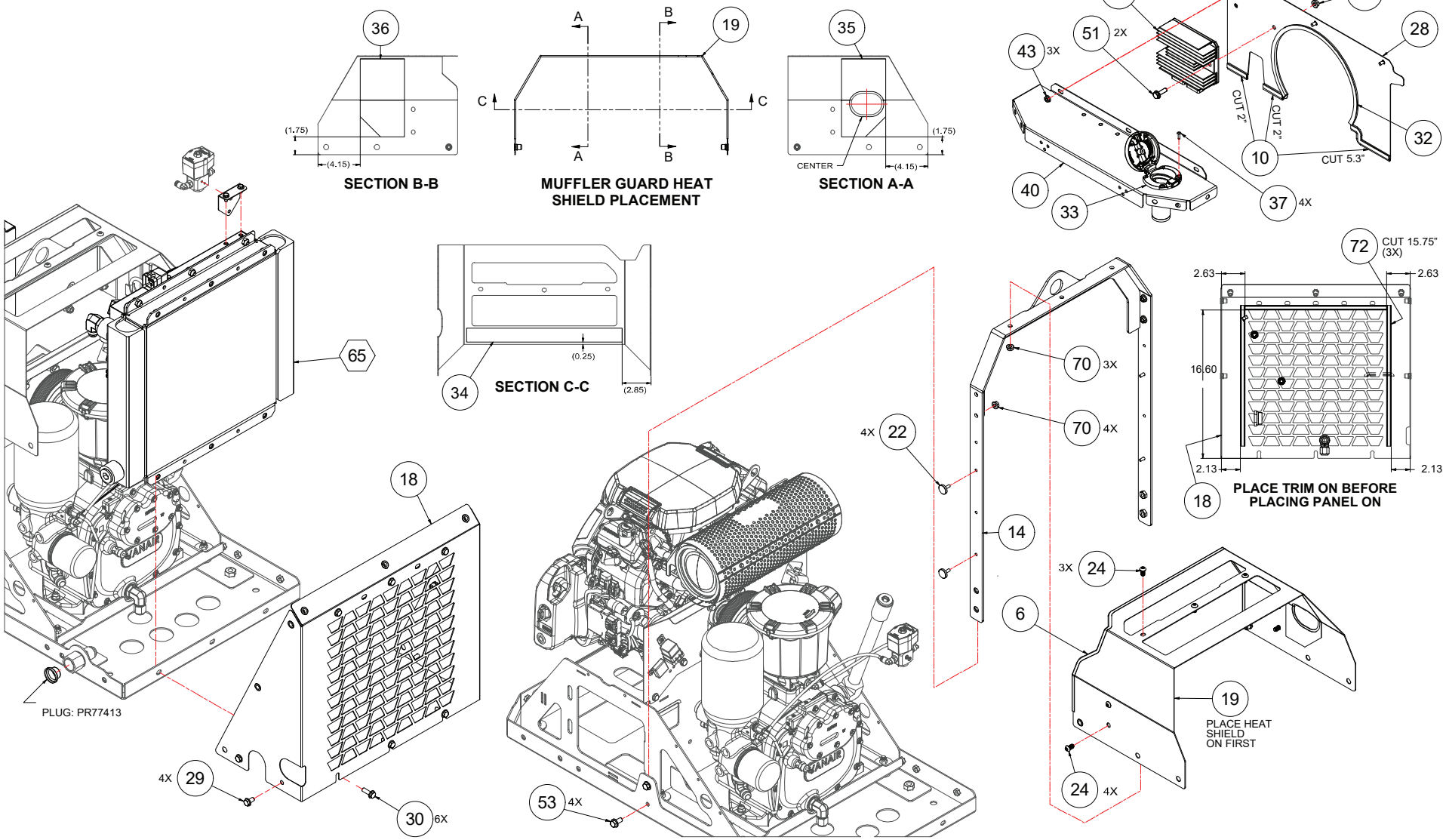

6030209ID_r9_3

VANAIR® MANUFACTURING, INC.
A Lincoln Electric Company
(844) VAN-SERV • vanair.com

7.5 FRAME AND DRIVE - 3 OF 4

ITEM	DESCRIPTION	PART #	QTY
1	CAPSCREW, HX GR8 5/16-24 x 1 GRD 5	650-216	2
2	ELECTRICAL SYSTEM, GV3	60603 [I]	1
3	ENGINE AND COMP DRIVE - OPTIONS	61003 [II]	1
4	COMPRESSOR - OPTIONS	61800 [III]	1
5	RELAY, NO/NC WTHRPRF w/RESISTOR	260246	1
6	TRIM-LOK,1/8 GROOVE	261228	4 ft
7	WASHER, SNUBBING RBBR MNT	265332	6
8	KEY, SQUARE 1/4 x 1/4 x 2 1/2	267639	1
9	BOLT, TAP 3/8-16 UNC-2B x 5.50 LG GR8 FL THRD	278133	1
10	TRIM-LOK, 1/8 GROOVE W/ 7/16 BULB	279712	9.3 in
11	RETAINER, SHEAVE GAS VIPER	281163	1
12	RECTIFIER, HONDA IGX800	281452-10	1
13	FRAME, BASE GV3	281460	1
14	BAIL, LIFT GV3	281461	1
15	SUPT, SUB-STRUCTURE GV3	281564	1
16	BRACKET, TENSIONER SLIDE	281685	1
17	MOUNT, RUBBER 280# AXIAL WHITE	281720	6
18	PANEL, COOLER GUARD/SUPT GV3	281847	1
19	PANEL, ENGINE MUFFLER SHIELD GV3	281869	1
20	HOSE, COMPR OIL CLR HOT GV3	281929	1
21	HOSE, COMPR OIL CLR COLD GV3	281930	1
22	BUMPER, SHEET METAL BLK	282074	4
23	SHEAVE, DRV K SCTN 8 GRV 3.54 OD	282269	2
24	SCREW, 5/16"-18 X 5/8 BTTN HD SKT BLK ZNC	282274-063	7
25	BUSHING, SHLDR ADPTR 0.75" IN L	282407	1
26	BUSHING, SHLDR ADPTR 1.00" IN L	282408	1
27	BAFFLE, ENGINE AIR OUT	282430	1
28	BAFFLE, ENGINE AIR IN	282431	1
29	BOLT, FLNG 5/16-18 X 5/8 BLK ZNC	282480-062	12
30	BOLT, FLNG 5/16-18 X 1 BLK ZNC	282480-100	9
31	PLATE, FRAME MOUNTING	282799	2
32	TRIM, SD BULB W/VNYL GRIP FITS 0.0625 EDGE, 0.375 HT	282861	1
33	CAP, GAS FILL NECK	282962	1
34	HEAT SHIELD, TOP MFLR GRD	283010-01	1
35	HEAT SHIELD, MFLR GRD EXHST SIDE	283010-02	1
36	HEAT SHIELD, MUFFLER GUARD	283010-03	1
37	RIVET, BLIND OPN END 5/32" GRIP RANGE 0.189"-0.378"	283912	4
38	HOSE, AIR DISCHARGE GV3	284894	1
39	PANEL, ENGINE SIDE GV3 (HD HNG)	285285	1
40	PANEL, FUEL FILL SUPT GV3 (HD HNG)	285287	0
41	NUT, HEX 3/8-16 YELLOW ZINC	825206-337	4
42	NUT, HEX FLANGE #12-24	825303-236	2
43	NUT, HEX FLANGE 1/4-20	825304-236	3
44	NUT, HEX FLANGE 5/16-18	825305-283	3
45	NUT, HEX FLANGE 3/8-16	825306-347	7
46	NUT, HEX LOCKING 3/8-16	825506-198	6
47	CAPSCREW, HEX GR5 5/16-18 x 1	829105-100	1
48	CAPSCREW, HEX GR5 7/16-14 x 0.75	829107-075	2
49	CAPSCREW, HEX GR5 1/2-13 x 2.25	829108-225	2
50	SCREW, SER WASH 5/16-18 x 0.625	829705-062	3
51	SCREW, SER WASH 5/16-18 x 1	829705-100	2
52	SCREW, SER WASH 3/8-16 x 0.625	829706-062	4
53	SCREW, SER WASH 3/8-16 x 0.75	829706-075	4
54	SCREW, MACHINE 1/4-20 x 1 1/2	830104-150	3
55	SCREW, MACHN #12-24X1/2	831603-050	2
56	WASHER, INTERNAL TOOTH 3/4"	837412-055	1
57	WASHER, FLAT 5/16	838205-071	2
58	WASHER, FLAT 3/8	838206-071	1
59	WASHER, FLAT 1/2	838208-112	4
60	WASHER, LOCK 1/4	838504-062	3
61	WASHER, LOCK 5/16	838505-078	2
62	WASHER, LOCK 7/16	838507-109	2
63	WASHER, LOCK 1/2	838508-125	2
64	BULKHEAD, 3/4 FNPT x #12 MJIC	862012-075	1
65	COOLING SYSTEM GV3	6020279	1
66	ENGINE & PARTS IGX800	6100283	1
67	FUEL TANK ASSY GV3	6140041	1
68	BUSHING, SDS, QD, 1 1/8DIA	DR85785Z	1
69	WASHER, 5/16ID X 21/32OD, 2 PC LKNG (NRD-LK)		1
70	NUT, HEX FLANGE 5/16-18	FA26142	9
71	WASHER, 3/8ID X 13/16OD NRD-LK	FA49463	2
72	GASKET, SEAL AND TRIM	PR35734	47.3 in
73	TRIM-LOK, 1/4 GROOVE	PR274358	10 in

PLEASE NOTE: WHEN ORDERING PARTS, INDICATE MACHINE SERIAL NUMBER.

[I] ELECTRICAL OPTIONS

ITEM #	DESCRIPTION	PART #	QTY
1A	ELECTRICAL SYSTEM, GV3	6060342	1
1B	ELEC SYS, GV3 CLD WTHR	6060387	1

[II] PULLEY/BELT OPTIONS

ITEM #	DESCRIPTION	MACHINE CFM	PART #	QTY
2A	DRV, ENG & CMPRSR PARTS GV3 80/100	6100308	1	1
2B	DRV, ENG & CMPRSR PARTS GV3 70/125	6100309	1	1
2C	DRV, ENG & CMPRSR PARTS GV3 60/150	6100311	1	1
2D	DRV, ENG & CMPRSR PARTS GV3 55/175	6100312	1	1

[III] COMPRESSOR OPTIONS

ITEM #	DESCRIPTION	PART #	QTY
3A	AIREND & ATT, VSE075DDSS000 INLT VLV VPR SOL	6180049	1
3B	AIREND & ATT, VSE075 ALDDSS000 EXT INLET VLV GV3	6180066	1

7.5 FRAME AND DRIVE - 4 OF 4

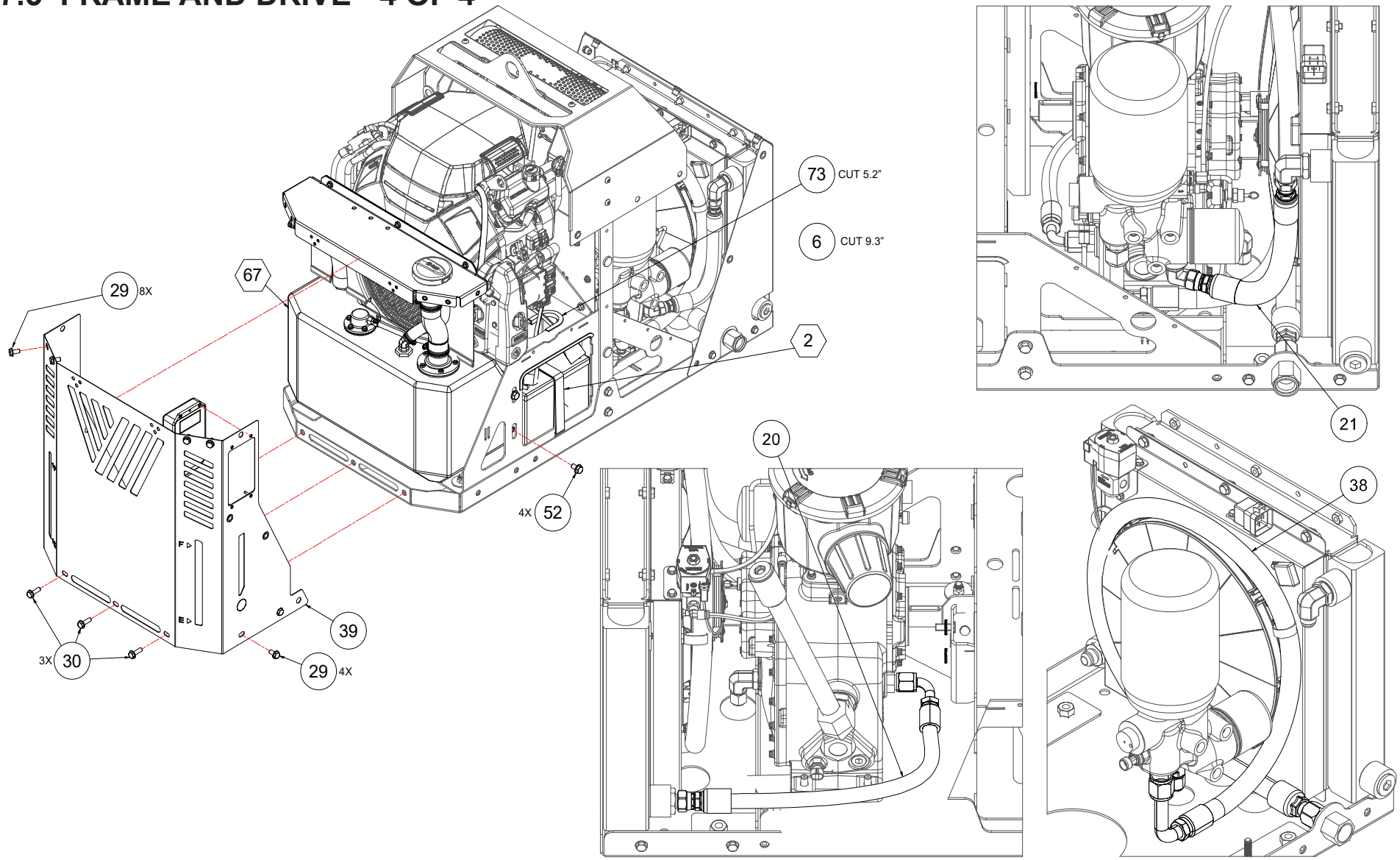

6030209ID_r9_4

7.5 FRAME AND DRIVE - 4 OF 4

ITEM	DESCRIPTION	PART #	QTY
1	CAPSCREW, HX GR8 5/16-24 x 1 GRD 5	650-216	2
2	ELECTRICAL SYSTEM, GV3	60603**	1
3	ENGINE AND COMP DRIVE - OPTIONS	61003**	1
4	COMPRESSOR - OPTIONS	61800**	1
5	RELAY, NO/NC WTHRPRF w/RESISTOR	260246	1
6	TRIM-LOK,1/8 GROOVE	261228	4 ft
7	WASHER, SNUBBING RBBR MNT	265332	6
8	KEY, SQUARE 1/4 x 1/4 x 2 1/2	267639	1
9	BOLT, TAP 3/8-16 UNC-2B x 5.50 LG GR8 FL THRD	278133	1
10	TRIM-LOK, 1/8 GROOVE W/ 7/16 BULB	279712	9.3 in
11	RETAINER, SHEAVE GAS VIPER	281163	1
12	RECTIFIER, HONDA IGX800	281452-10	1
13	FRAME, BASE GV3	281460	1
14	BAIL, LIFT GV3	281461	1
15	SUPT, SUB-STRUCTURE GV3	281564	1
16	BRACKET, TENSIONER SLIDE	281685	1
17	MOUNT, RUBBER 280# AXIAL WHITE	281720	6
18	PANEL, COOLER GUARD/SUPT GV3	281847	1
19	PANEL, ENGINE MUFFLER SHIELD GV3	281869	1
20	HOSE, COMPR OIL CLR HOT GV3	281929	1
21	HOSE, COMPR OIL CLR COLD GV3	281930	1
22	BUMPER, SHEET METAL BLK	282074	4
23	SHEAVE, DRV K SCTN 8 GRV 3.54 OD	282269	2
24	SCREW, 5/16"-18 X 5/8 BTTN HD SKT BLK ZNC	282274-063	7
25	BUSHING, SHLDR ADPTR 0.75" IN L	282407	1
26	BUSHING, SHLDR ADPTR 1.00" IN L	282408	1
27	BAFFLE, ENGINE AIR OUT	282430	1
28	BAFFLE, ENGINE AIR IN	282431	1
29	BOLT, FLNG 5/16-18 X 5/8 BLK ZNC	282480-062	12
30	BOLT, FLNG 5/16-18 X 1 BLK ZNC	282480-100	9
31	PLATE, FRAME MOUNTING	282799	2
32	TRIM, SD BULB W/VNYL GRIP FITS 0.0625 EDGE, 0.375 HT	282861	1
33	CAP, GAS FILL NECK	282962	1
34	HEAT SHIELD, TOP MFLR GRD	283010-01	1
35	HEAT SHIELD, MFLR GRD EXHST SIDE	283010-02	1
36	HEAT SHIELD, MUFFLER GUARD	283010-03	1
37	RIVET, BLIND OPN END 5/32" GRIP RANGE 0.189"-0.378"	283912	4
38	HOSE, AIR DISCHARGE GV3	284894	1
39	PANEL, ENGINE SIDE GV3 (HD HNG)	285285	1
40	PANEL, FUEL FILL SUPT GV3 (HD HNG)	285287	0
41	NUT, HEX 3/8-16 YELLOW ZINC	825206-337	4
42	NUT, HEX FLANGE #12-24	825303-236	2
43	NUT, HEX FLANGE 1/4-20	825304-236	3
44	NUT, HEX FLANGE 5/16-18	825305-283	3
45	NUT, HEX FLANGE 3/8-16	825306-347	7
46	NUT, HEX LOCKING 3/8-16	825506-198	6
47	CAPSCREW, HEX GR5 5/16-18 x 1	829105-100	1
48	CAPSCREW, HEX GR5 7/16-14 x 0.75	829107-075	2
49	CAPSCREW, HEX GR5 1/2-13 x 2.25	829108-225	2
50	SCREW, SER WASH 5/16-18 x 0.625	829705-062	3
51	SCREW, SER WASH 5/16-18 x 1	829705-100	2
52	SCREW, SER WASH 3/8-16 x 0.625	829706-062	4
53	SCREW, SER WASH 3/8-16 x 0.75	829706-075	4
54	SCREW, MACHINE 1/4-20 x 1 1/2	830104-150	3
55	SCREW, MACHN #12-24X1/2	831603-050	2
56	WASHER, INTERNAL TOOTH 3/4"	837412-055	1
57	WASHER, FLAT 5/16	838205-071	2
58	WASHER, FLAT 3/8	838206-071	1
59	WASHER, FLAT 1/2	838208-112	4
60	WASHER, LOCK 1/4	838504-062	3
61	WASHER, LOCK 5/16	838505-078	2
62	WASHER, LOCK 7/16	838507-109	2
63	WASHER, LOCK 1/2	838508-125	2
64	BULKHEAD, 3/4 FNPT x #12 MJIC	862012-075	1
65	COOLING SYSTEM GV3	6020279	1
66	ENGINE & PARTS IGX800	6100283	1
67	FUEL TANK ASSY GV3	6140041	1
68	BUSHING, SDS, QD, 1 1/8DIA	DR85785Z	1
69	WASHER, 5/16ID X 21/32OD, 2 PC LKNG (NRD-LK)		1
70	NUT, HEX FLANGE 5/16-18	FA26142	9
71	WASHER, 3/8ID X 13/16OD NRD-LK	FA49463	2
72	GASKET, SEAL AND TRIM	PR35734	47.3 in
73	TRIM-LOK, 1/4 GROOVE	PR274358	10 in

PLEASE NOTE: WHEN ORDERING PARTS, INDICATE MACHINE SERIAL NUMBER.

I ELECTRICAL OPTIONS

ITEM #	DESCRIPTION	PART #	QTY
1A	ELECTRICAL SYSTEM, GV3	6060342	1
1B	ELEC SYS, GV3 CLD WTHR	6060387	1

II PULLEY/BELT OPTIONS

ITEM #	DESCRIPTION	MACHINE CFM	PART #	QTY
2A	DRV, ENG & CMPRSR PARTS GV3 80/100	6100308	1	1
2B	DRV, ENG & CMPRSR PARTS GV3 70/125	6100309	1	1
2C	DRV, ENG & CMPRSR PARTS GV3 60/150	6100311	1	1
2D	DRV, ENG & CMPRSR PARTS GV3 55/175	6100312	1	1

III COMPRESSOR OPTIONS

ITEM #	DESCRIPTION	PART #	QTY
3A	AIREND & ATT, VSE075DDSS000 INLT VLV VPR SOL	6180049	1
3B	AIREND & ATT, VSE075 ALDDSS000 EXT INLET VLV GV3	6180066	1

7.6 CANOPY ASSEMBLY - 1 OF 3

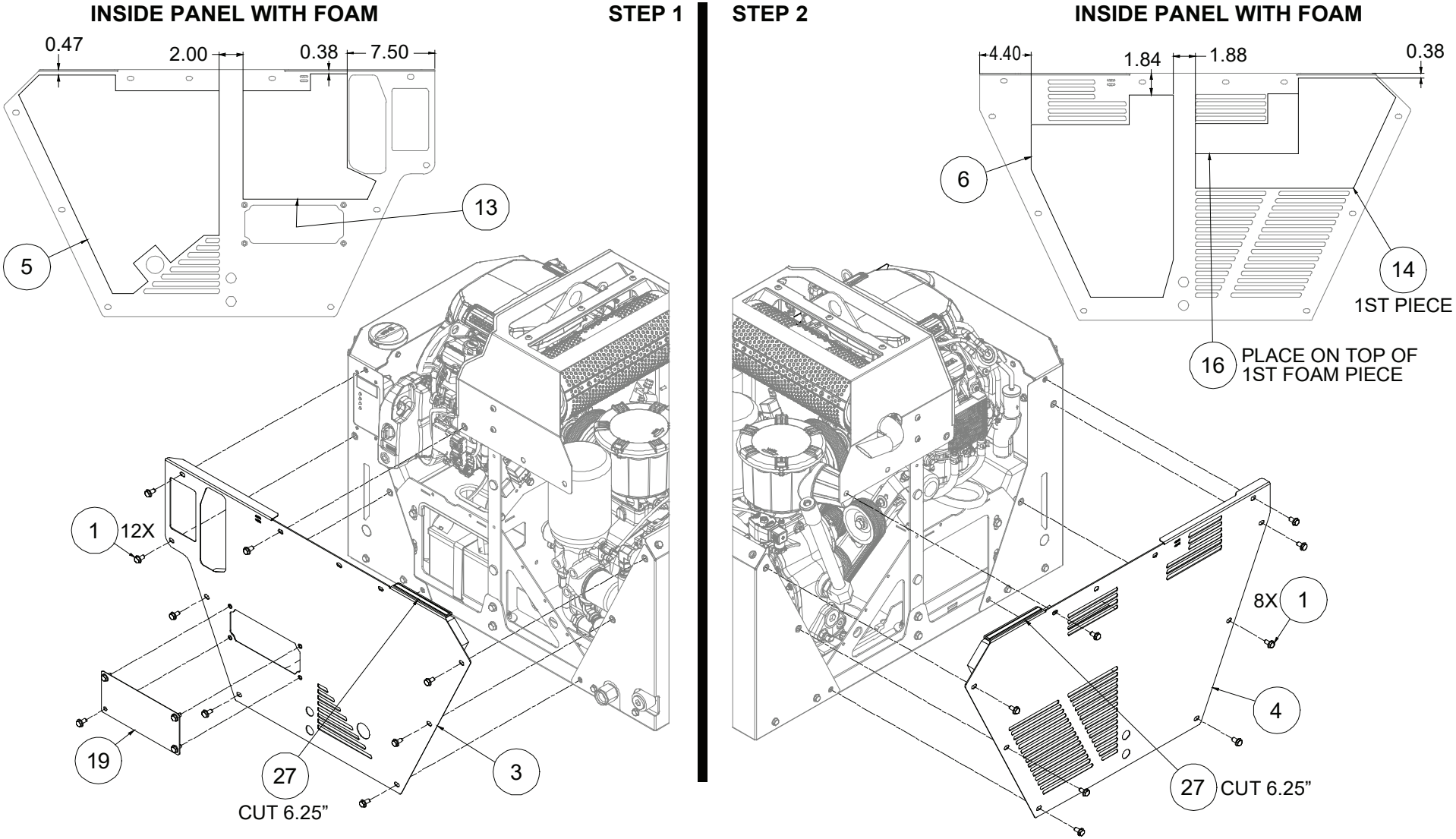

6030221ID_r3_1

VANAIR® MANUFACTURING, INC.
A Lincoln Electric Company
(844) VAN-SERV • vanair.com

7.6 CANOPY ASSEMBLY - 1 OF 3

ITEM	DESCRIPTION	PART NUMBER	QTY	ITEM	DESCRIPTION	PART NUMBER	QTY
1	BOLT, FLANGE 5/16-18 x .63 SILVER	278623-063	24	15	FOAM, HOOD AIR BAFFLE	281964-16**	1
2	PANEL, TOP ACCESS GV3	281854	1	16	FOAM, COMPRESSOR AIR BAFFLE	281964-17**	1
3	PANEL, FRONT CANOPY	281870	1	17	LATCH, HOOD GV3	282029	2
4	PANEL, BACK CANOPY GV3	281871	1	18	BOLT, FLANGE 5/16-18 X 5/8 BLK ZINC	282480-062	3
5	FOAM, SOUND FRT RIGHT PANEL	281964-01 [I]	1	19	PANEL, BATTERY ACCESS	282975	1
6	FOAM, SOUND BACK LEFT PANEL	281964-02 [I]	1	20	TRIM, TOP BULB W/VINYL GRIP FITS 0.0625 EDGE, 0.375 HEIGHT	283353	19.25 in
7	FOAM, SOUND FRT SIDE PNL HOOD	281964-03 [I]	1	21	SCREW, #10-32 X 5/8 PHILLIPS OVAL HD BLK ZINC	285264-063	12
8	FOAM, SOUND BACK SIDE PNL HOOD	281964-04 [I]	1				
9	FOAM, SOUND LATCH SIDE HOOD	281964-05 [I]	1	22	HOOD, STEEL GV3 (HD HINGE)	285286	1
10	FOAM, SOUND TOP SIDE HOOD	281964-06 [I]	1	23	HINGE, DIE CAST BLACK ZINC	285288	2
11	FOAM, SOUND ANGLED TOP SIDE HOOD	281964-07 [I]	1	24	NUT, HEX LOCKING #8-32	825501-070	8
12	FOAM, SOUND TOP PANEL	281964-09 [I]	1	25	NUT, HEX LOCKING #10-32	825702-083	6
13	FOAM, SOUND FRT LEFT	281964-10 [I]	1	26	SCREW, ROUND HD #8-32 x 0.5	831601-050	8
14	FOAM, SOUND BACK RIGHT PANEL	281964-11 [I]	1	27	GASKET, SEAL AND TRIM	PR35734	34.50 in

[I] Foam part of kit no. 281964.

PLEASE NOTE: WHEN ORDERING PARTS, INDICATE MACHINE SERIAL NUMBER.

7.6 CANOPY ASSEMBLY - 2 OF 3

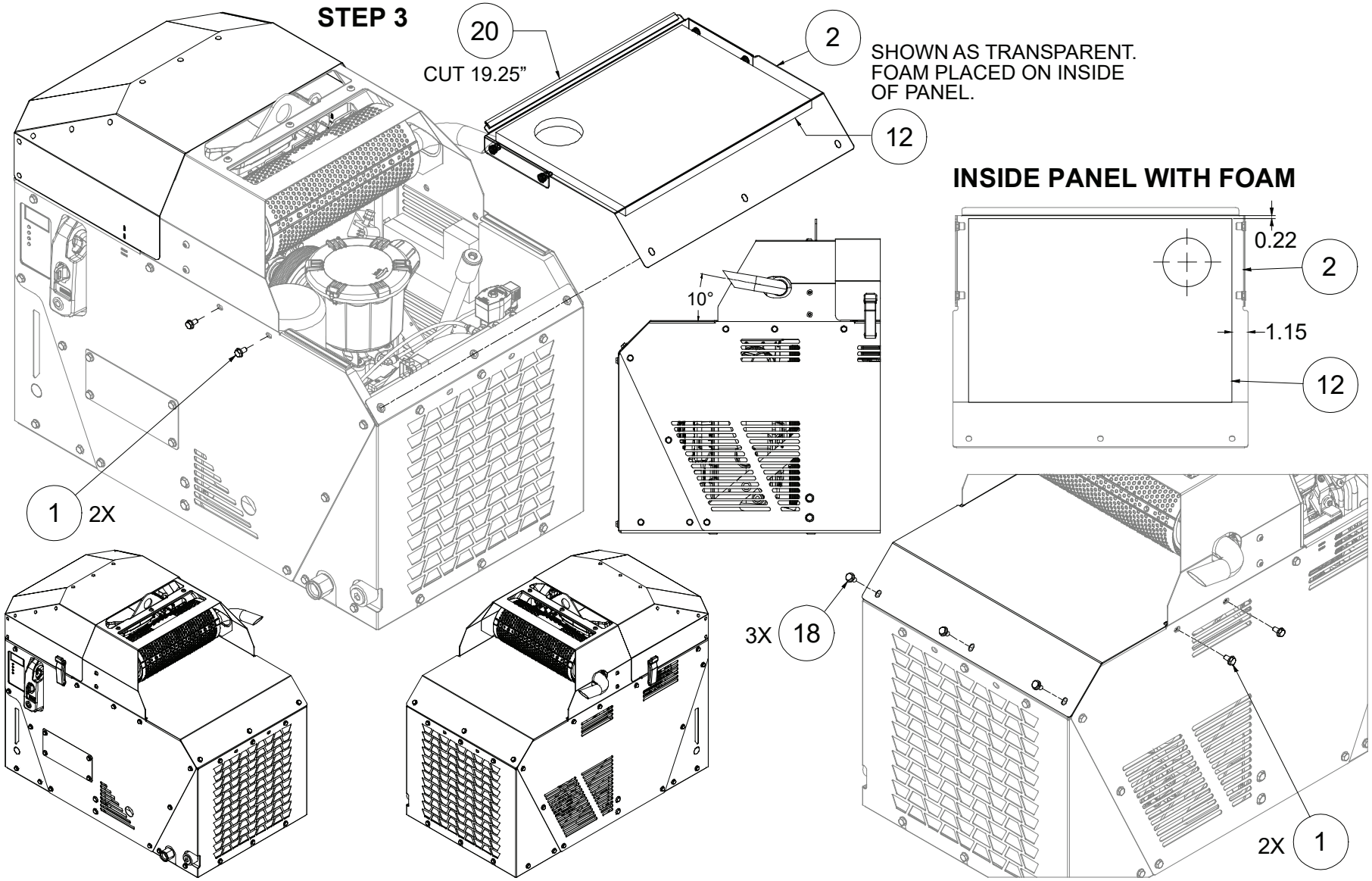

6030221ID_r3_2

7.6 CANOPY ASSEMBLY - 2 OF 3

ITEM	DESCRIPTION	PART NUMBER	QTY	ITEM	DESCRIPTION	PART NUMBER	QTY
1	BOLT, FLANGE 5/16-18 x .63 SILVER	278623-063	24	15	FOAM, HOOD AIR BAFFLE	281964-16**	1
2	PANEL, TOP ACCESS GV3	281854	1	16	FOAM, COMPRESSOR AIR BAFFLE	281964-17**	1
3	PANEL, FRONT CANOPY	281870	1	17	LATCH, HOOD GV3	282029	2
4	PANEL, BACK CANOPY GV3	281871	1	18	BOLT, FLANGE 5/16-18 X 5/8 BLK ZINC	282480-062	3
5	FOAM, SOUND FRT RIGHT PANEL	281964-01 [I]	1	19	PANEL, BATTERY ACCESS	282975	1
6	FOAM, SOUND BACK LEFT PANEL	281964-02 [I]	1	20	TRIM, TOP BULB W/VINYL GRIP FITS 0.0625 EDGE, 0.375 HEIGHT	283353	19.25 in
7	FOAM, SOUND FRT SIDE PNL HOOD	281964-03 [I]	1	21	SCREW, #10-32 X 5/8 PHILLIPS OVAL HD BLK ZINC	285264-063	12
8	FOAM, SOUND BACK SIDE PNL HOOD	281964-04 [I]	1				
9	FOAM, SOUND LATCH SIDE HOOD	281964-05 [I]	1	22	HOOD, STEEL GV3 (HD HINGE)	285286	1
10	FOAM, SOUND TOP SIDE HOOD	281964-06 [I]	1	23	HINGE, DIE CAST BLACK ZINC	285288	2
11	FOAM, SOUND ANGLED TOP SIDE HOOD	281964-07 [I]	1	24	NUT, HEX LOCKING #8-32	825501-070	8
12	FOAM, SOUND TOP PANEL	281964-09 [I]	1	25	NUT, HEX LOCKING #10-32	825702-083	6
13	FOAM, SOUND FRT LEFT	281964-10 [I]	1	26	SCREW, ROUND HD #8-32 x 0.5	831601-050	8
14	FOAM, SOUND BACK RIGHT PANEL	281964-11 [I]	1	27	GASKET, SEAL AND TRIM	PR35734	34.50 in

[I] Foam part of kit no. 281964.

PLEASE NOTE: WHEN ORDERING PARTS, INDICATE MACHINE SERIAL NUMBER.

7.6 CANOPY ASSEMBLY - 3 OF 3

PLACE FOAM INSIDE HOOD AS SHOWN.

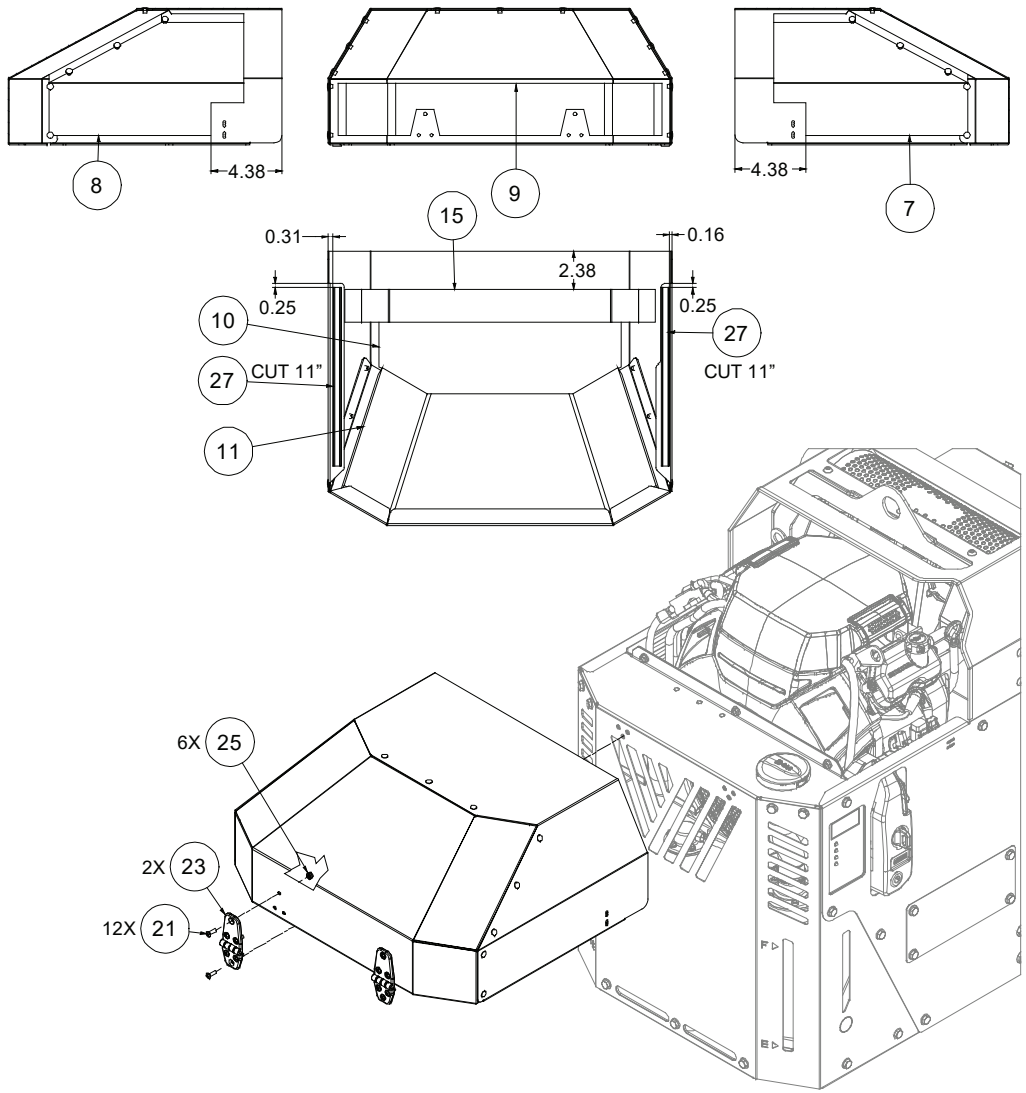

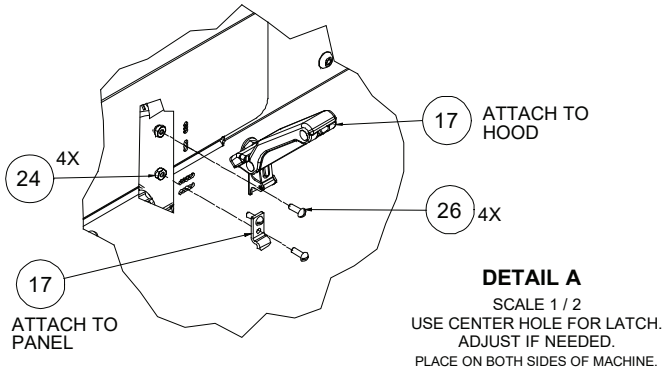

DETAIL A

SCALE 1 / 2
USE CENTER HOLE FOR LATCH.
ADJUST IF NEEDED.
PLACE ON BOTH SIDES OF MACHINE.

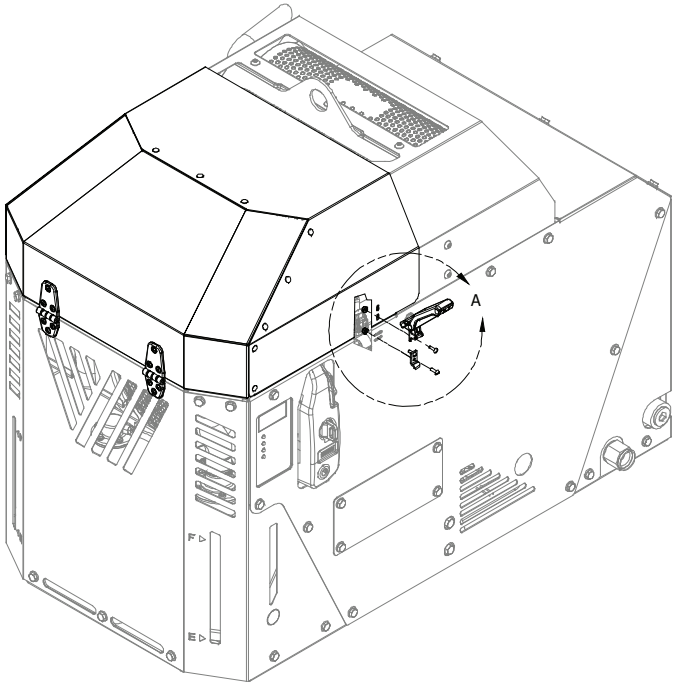

6030221ID_r3_3

VANAIR® MANUFACTURING, INC.
A Lincoln Electric Company
(844) VAN-SERV • vanair.com

7.6 CANOPY ASSEMBLY - 3 OF 3

ITEM	DESCRIPTION	PART NUMBER	QTY	ITEM	DESCRIPTION	PART NUMBER	QTY
1	BOLT, FLANGE 5/16-18 x .63 SILVER	278623-063	24	15	FOAM, HOOD AIR BAFFLE	281964-16**	1
2	PANEL, TOP ACCESS GV3	281854	1	16	FOAM, COMPRESSOR AIR BAFFLE	281964-17**	1
3	PANEL, FRONT CANOPY	281870	1	17	LATCH, HOOD GV3	282029	2
4	PANEL, BACK CANOPY GV3	281871	1	18	BOLT, FLANGE 5/16-18 X 5/8 BLK ZINC	282480-062	3
5	FOAM, SOUND FRT RIGHT PANEL	281964-01 [I]	1	19	PANEL, BATTERY ACCESS	282975	1
6	FOAM, SOUND BACK LEFT PANEL	281964-02 [I]	1	20	TRIM, TOP BULB W/VINYL GRIP FITS 0.0625 EDGE, 0.375 HEIGHT	283353	19.25 in
7	FOAM, SOUND FRT SIDE PNL HOOD	281964-03 [I]	1	21	SCREW, #10-32 X 5/8 PHILLIPS OVAL HD BLK ZINC	285264-063	12
8	FOAM, SOUND BACK SIDE PNL HOOD	281964-04 [I]	1				
9	FOAM, SOUND LATCH SIDE HOOD	281964-05 [I]	1	22	HOOD, STEEL GV3 (HD HINGE)	285286	1
10	FOAM, SOUND TOP SIDE HOOD	281964-06 [I]	1	23	HINGE, DIE CAST BLACK ZINC	285288	2
11	FOAM, SOUND ANGLED TOP SIDE HOOD	281964-07 [I]	1	24	NUT, HEX LOCKING #8-32	825501-070	8
12	FOAM, SOUND TOP PANEL	281964-09 [I]	1	25	NUT, HEX LOCKING #10-32	825702-083	6
13	FOAM, SOUND FRT LEFT	281964-10 [I]	1	26	SCREW, ROUND HD #8-32 x 0.5	831601-050	8
14	FOAM, SOUND BACK RIGHT PANEL	281964-11 [I]	1	27	GASKET, SEAL AND TRIM	PR35734	34.50 in

[I] Foam part of kit no. 281964.

PLEASE NOTE: WHEN ORDERING PARTS, INDICATE MACHINE SERIAL NUMBER.

7.7 COOLING SYSTEM

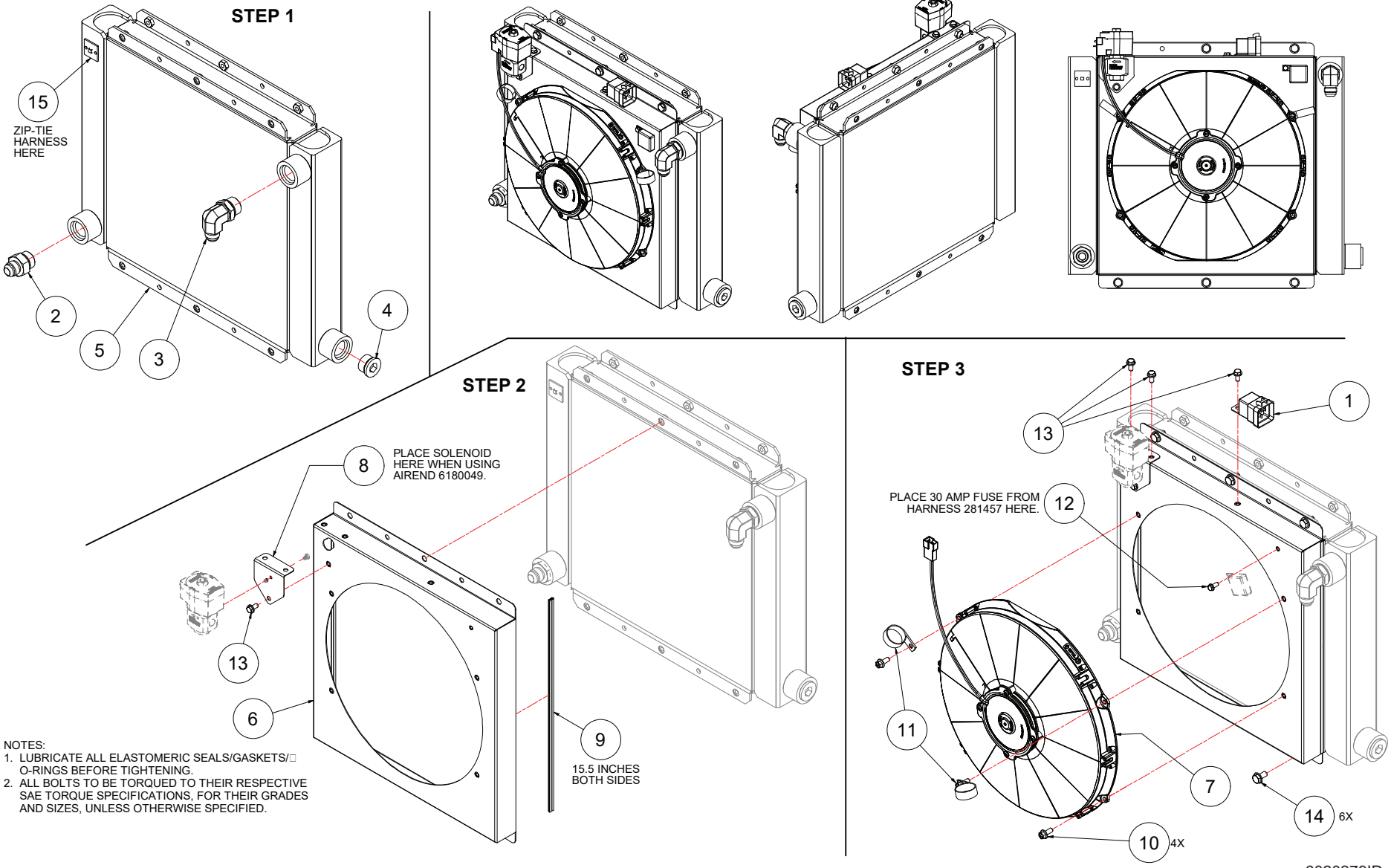

NOTES:
1. LUBRICATE ALL ELASTOMERIC SEALS/GASKETS/□ O-RINGS BEFORE TIGHTENING.
2. ALL BOLTS TO BE TORQUED TO THEIR RESPECTIVE SAE TORQUE SPECIFICATIONS, FOR THEIR GRADES AND SIZES, UNLESS OTHERWISE SPECIFIED.

6020279ID_r3

7.7 COOLING SYSTEM

ITEM	DESCRIPTION	PART NUMBER	QTY
1	RELAY, NO/NC WEATHERPROOF w/RESISTOR	260246	1
2	CONNECTOR, #12 MSAE x #10 MJIC	260387-110	1
3	ELBOW, 90 DEG #10 MJIC x #12 MSAE	260403-131	1
4	PLUG, SAE O-RING #12	268081-008	1
5	COOLER, ASSEMBLY GV3	281527	1
6	SHROUD, COOLER VIPER LOW AMP FAN	281528	1
7	FAN & MOTOR ASSY 13" PUSHER 12V	282403	1
8	BRACKET, SOLENOID GV3	282866	1
9	TRIM, TOP BULB W/VINYL GRIP FITS 0.0625 EDGE, 0.375 HEIGHT	283353	31 in
10	BOLT, FLANGE 1/4-20 X 0.63 ZINC	284848	4
11	CLAMP, HOSE 1-3/16 MED DUTY - 0.281 HOLE DIA - 1/2 WIDTH	284976	2
12	SCREW, SER WASH #12-24 x 0.5	829703-050	1
13	SCREW, SER WASH 1/4-20 x 0.5	829704-050	4
14	SCREW, SER WASH 5/16-18 x 0.625	829705-062	6
15	MOUNT, CABLE TIE ADHESIVE BACK 1-1/8 SQUARE x 3/16 HIGH SLMF	SHOP548	1

PLEASE NOTE: WHEN ORDERING PARTS, INDICATE MACHINE SERIAL NUMBER.

7.8 ELECTRICAL SYSTEM

NOTE:
1. CHECK BULLET CONNECTORS ON HARNESS TO ENSURE CONNECTION. IT MAY BE NECESSARY TO PINCH THEM WITH PLIERS TO ENSURE A TIGHT FIT.
2. COLD WEATHER OPTION 6060387

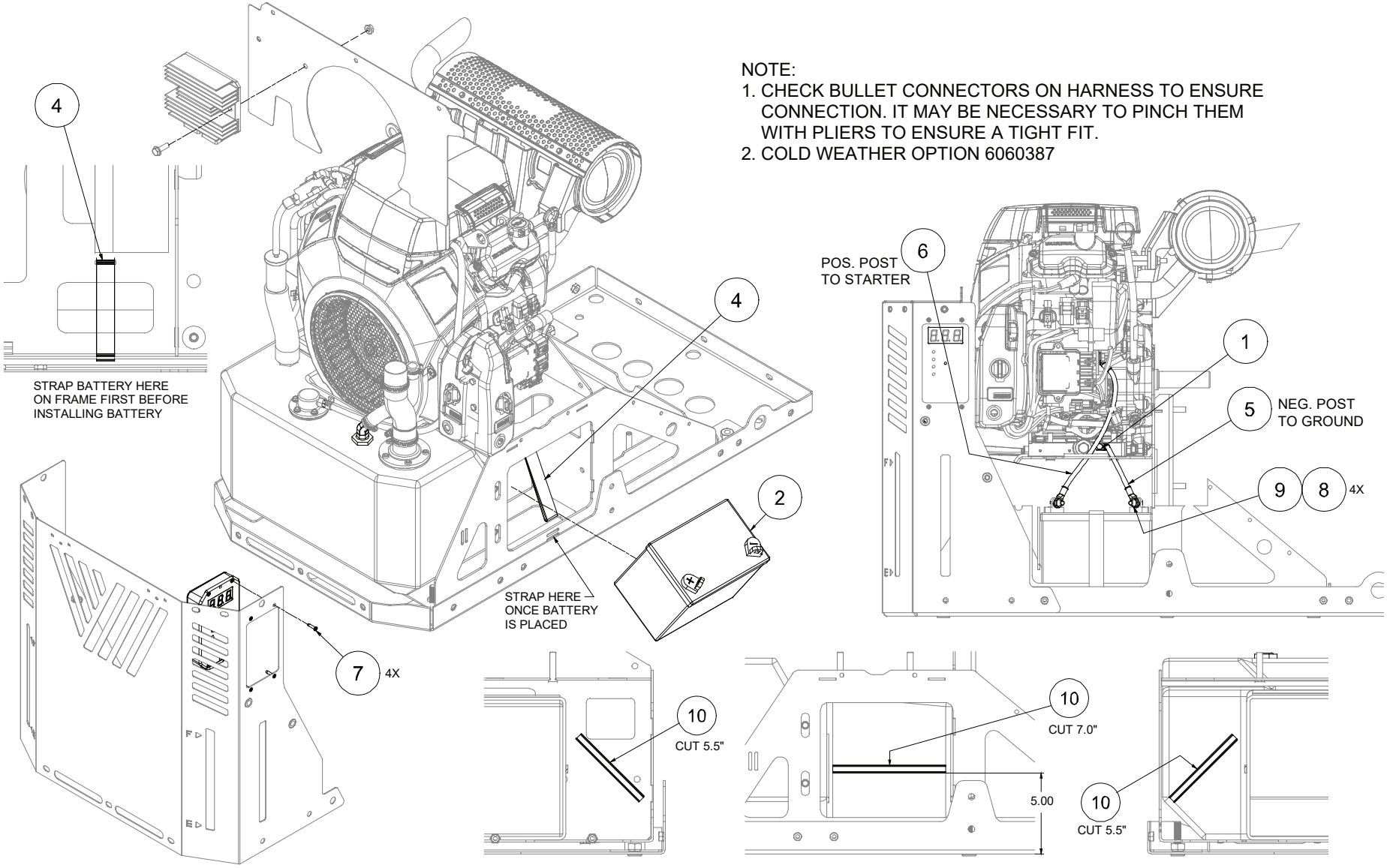

6060342ID_r1

VANAIR® MANUFACTURING, INC.
A Lincoln Electric Company
(844) VAN-SERV • vanair.com

7.8 ELECTRICAL SYSTEM

ITEM	DESCRIPTION	PART NUMBER	QTY
1	SCREW, HEX M6-1.0 X 16MM CLEAR ZINC	263393-016	1
2	BATTERY, 12V GROUP U1LF 350 CCA	277481	1
-	HARNESS, WIRE GV3	281457	1
-	WD, GV3 [I]	281458	1
3	MODULE, ENGINE AUTO START/STOP	281526	1
4	STRAP, BATTERY GV3	282035	1
5	CABLE, BATTERY NEGATIVE GV3	282261	1
6	CABLE, BATTERY POSITIVE GV3	282262	1
7	SCREW, COUNTERSUNK PHILLIPS #8-32 X 3/4	282479-075	4
8	SCREW, SER WASH 5/16-18 x 1	829705-100	2
9	NUT, HEX FLANGE 5/16-18	FA26142	2
10	GASKET, SEAL AND TRIM	PR35734	18 in

[I] Refer to **Section 7.13**.

PLEASE NOTE: WHEN ORDERING PARTS, INDICATE MACHINE SERIAL NUMBER.

7.9 ELECTRICAL SYSTEM - COLD WEATHER (OPTIONAL)

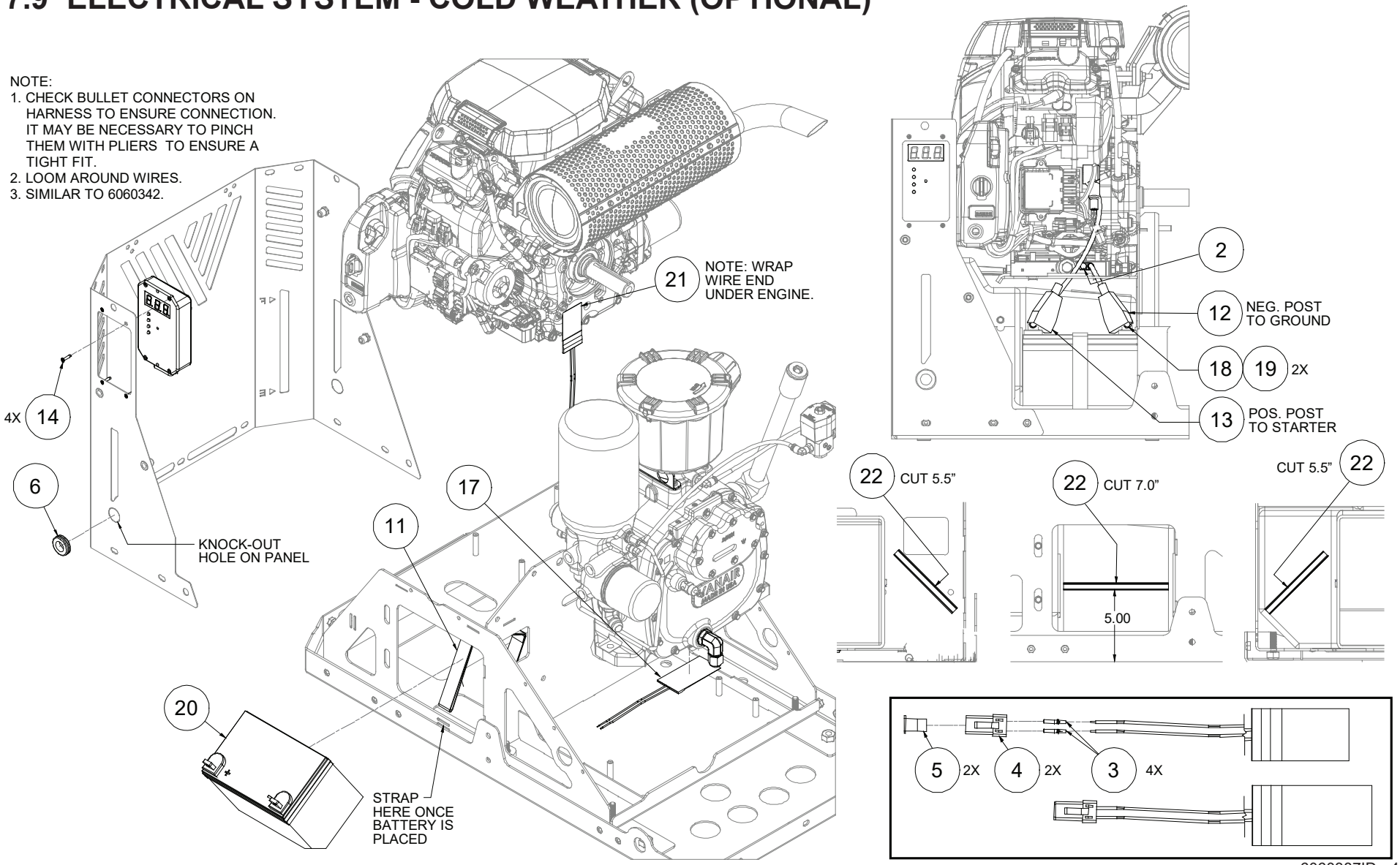

VANAIR® MANUFACTURING, INC.
A Lincoln Electric Company
(844) VAN-SERV • vanair.com

7.9 ELECTRICAL SYSTEM - COLD WEATHER (OPTIONAL)

ITEM	DESCRIPTION	PART NUMBER	QTY
1	LOOM, FLEX-GARD 1/4 ID 300 DEG. F.	262751	6 ft
2	SCREW, HEX M6-1.0 X 16MM CLEAR ZINC	263393-016	1
3	TERMINAL, DEUTSCH SOCKET 14GA SIZE 16	268895	4
4	PLUG, DEUTSCH DT06-2S	268902	2
5	WEDGELOCK, DEUTSCH W2S	268903	2
6	GROMMET, RUBBER .75ID X 1.06GD X 1.38OD	275077	1
7	HARNESS, EXT FOR CW KIT GAS VIPER	280041	1
8	HARNESS, WIRE GV3	281457	1
9	WD, GV3 [I]	281458	1
10	MODULE, ENGINE AUTO START/STOP	281526	1
11	STRAP, BATTERY GV3	282035	1
12	CABLE, BATTERY NEGATIVE GV3	282261	1
13	CABLE, BATTERY POSITIVE GV3	282262	1
14	SCREW, COUNTERSUNK PHILLIPS #8-32 X 3/4	282479-075	4
15	WD, COLD WEATHER 12V GV3	283448	1
16	HARNESS, COLD WEATHER OPT 12V GV3	283449	1
17	HEATER, FLUID 12VDC 60WATT (4 X 2)	283693	2
18	NUT, HEX FLANGE 1/4-20	825304-236	2
19	SCREW, SER WASH 1/4-20 x 1	829704-100	2
20	BATTERY,12 VOLT 35 AMP DEEP	MA31821	1
21	HEATER, FLUID 12VDC 80WATT	MA270855	1
22	GASKET, SEAL AND TRIM	PR35734	18 in

[I] Refer to **Section 7.13**.

PLEASE NOTE: WHEN ORDERING PARTS, INDICATE MACHINE SERIAL NUMBER.

7.10 FUEL TANK ASSEMBLY

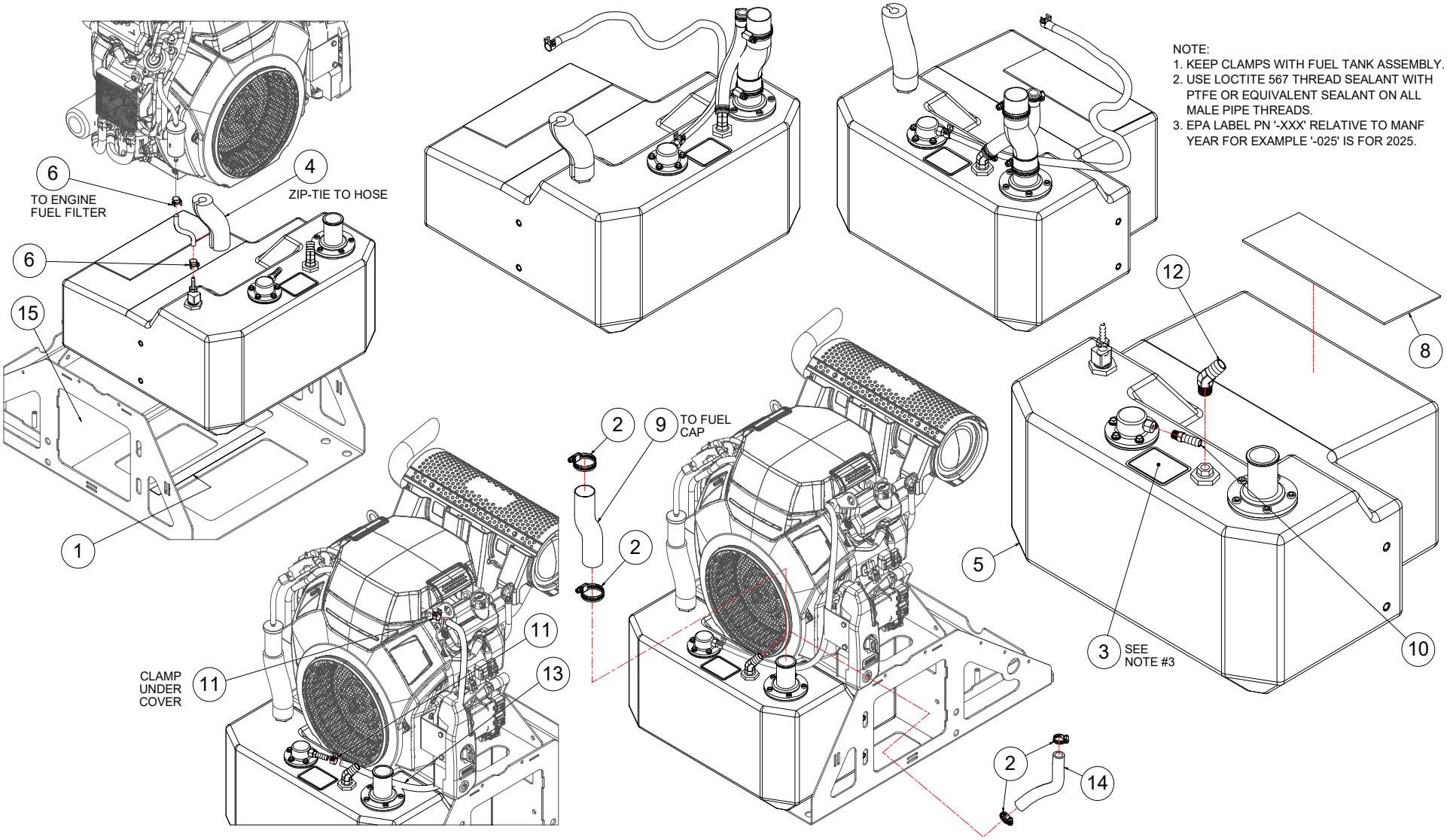

6140041ID_r4

VANAIR® MANUFACTURING, INC.
A Lincoln Electric Company
(844) VAN-SERV • vanair.com

7.10 FUEL TANK ASSEMBLY

ITEM	DESCRIPTION	PART NUMBER	QTY
1	PAD, FUEL TANK	262709	12 in
2	CLAMP, HOSE, #24, 1"-2" DIA.	270493	2
3	LABEL, EPA	271790-XXX	1
4	INSULATION, PIPE 5/8ID x 1/2THK	280339	7.25 in
5	TANK, FUEL 11 GAL PLASTIC	281383	1
6	CLAMP, HOSE #4 (1/4 TO 5/8 DIA.)	282731	2
7	CLAMP, HOSE #8 (3/8 TO 1 DIA.)	282732	2
8	HEAT SHIELD, FUEL TANK	283010-04	1
9	HOSE, FUEL FILL 1-1/2" FLEXIBLE	283077	7.5 in
10	BARB, 3/8 HOSE X 1/8 M NPT BRASS	283692	1
11	CLAMP, HOSE #5 (7/16" - 11/16")	283918	2
12	BARB, 45° ELBOW 5/8 HOSE X 3/8 M NPT BRASS	283956	1
13	HOSE, FUEL LINE 3/8	842315-038	25.5 in
14	HOSE, FUEL LINE 5/8 INCH	842315-062	9.0 in
15	HOSE, FUEL 1/4" SAE 30R9	TU269439	6.0 in

PLEASE NOTE: WHEN ORDERING PARTS, INDICATE MACHINE SERIAL NUMBER.

7.11 DECAL LOCATION/IDENTIFICATION - 1 OF 2

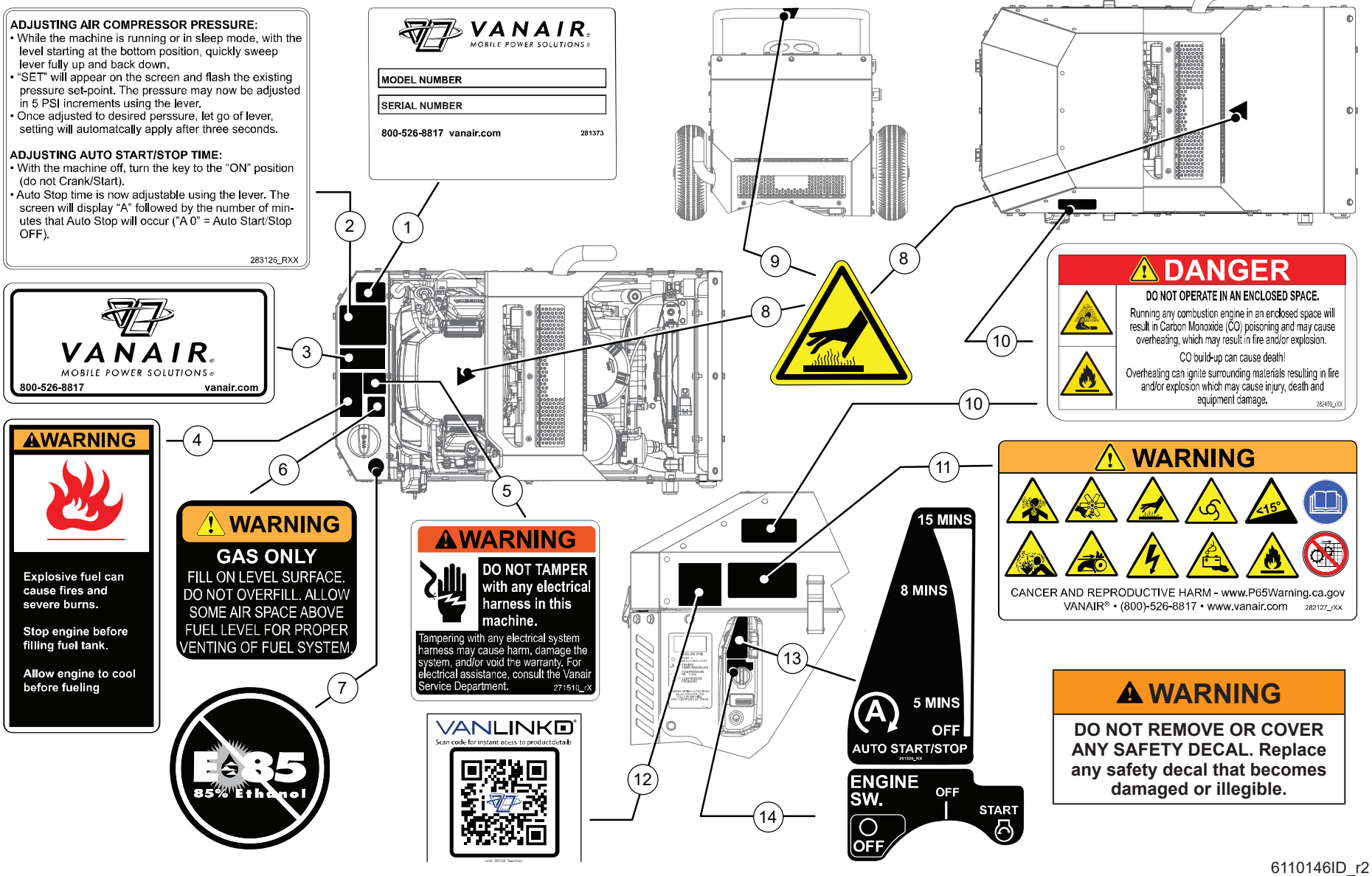

6110146ID_r2

7.11 DECAL LOCATION/IDENTIFICATION - 1 OF 2

ITEM	DESCRIPTION	PART NUMBER	QTY	SET 281699	SHEET 281700
1	DECAL, VANAIR SERIAL TAG (MODEL/SERIAL # ONLY)	281373	1	-	-
2	DECAL, INST. AUTO-START/STOP & PRESSURE ADJUSTMENT	283126	1	-	-
3	DECAL, VANAIR ADDRESS	265605	1	-	X
4	DECAL, EXPLOSIVE FUEL	264377	1	-	X
5	DECAL, WARNING ELECTRIC TAMPER	271510	1	-	X
6	DECAL, WARNING FUEL FILL - GAS ONLY	281813	1	-	X
7	DECAL, NO E85 GAS CAP LOGO	DL270183	1	-	X
8	DECAL, WARNING HOT TRIANGLE 2.0”	281046	2	-	X
9	DECAL, WARNING HOT TRIANGLE 1.0"	280032 [I]	1	-	X
10	DECAL, DANGER DO NOT OPERATE IN AN ENCLOSED SPACE (4” X 2”)	282459	1	-	X
11	DECAL, WARNING TRIANGLES ONLY	282127	1	-	X
12	DECAL, QR CODE GV3	285120	1	-	-
13	DECAL, AUTO START STOP HONDA	281525	1	-	-
14	DECAL, IGNITION PLATE, HONDA	[II]	1	-	-

[I] Used on wheel kit option only.

[II] Contact the Vanair® Parts Department for replacement.

PLEASE NOTE: WHEN ORDERING PARTS, INDICATE MACHINE SERIAL NUMBER.

7.11 DECAL LOCATION/IDENTIFICATION - 2 OF 2

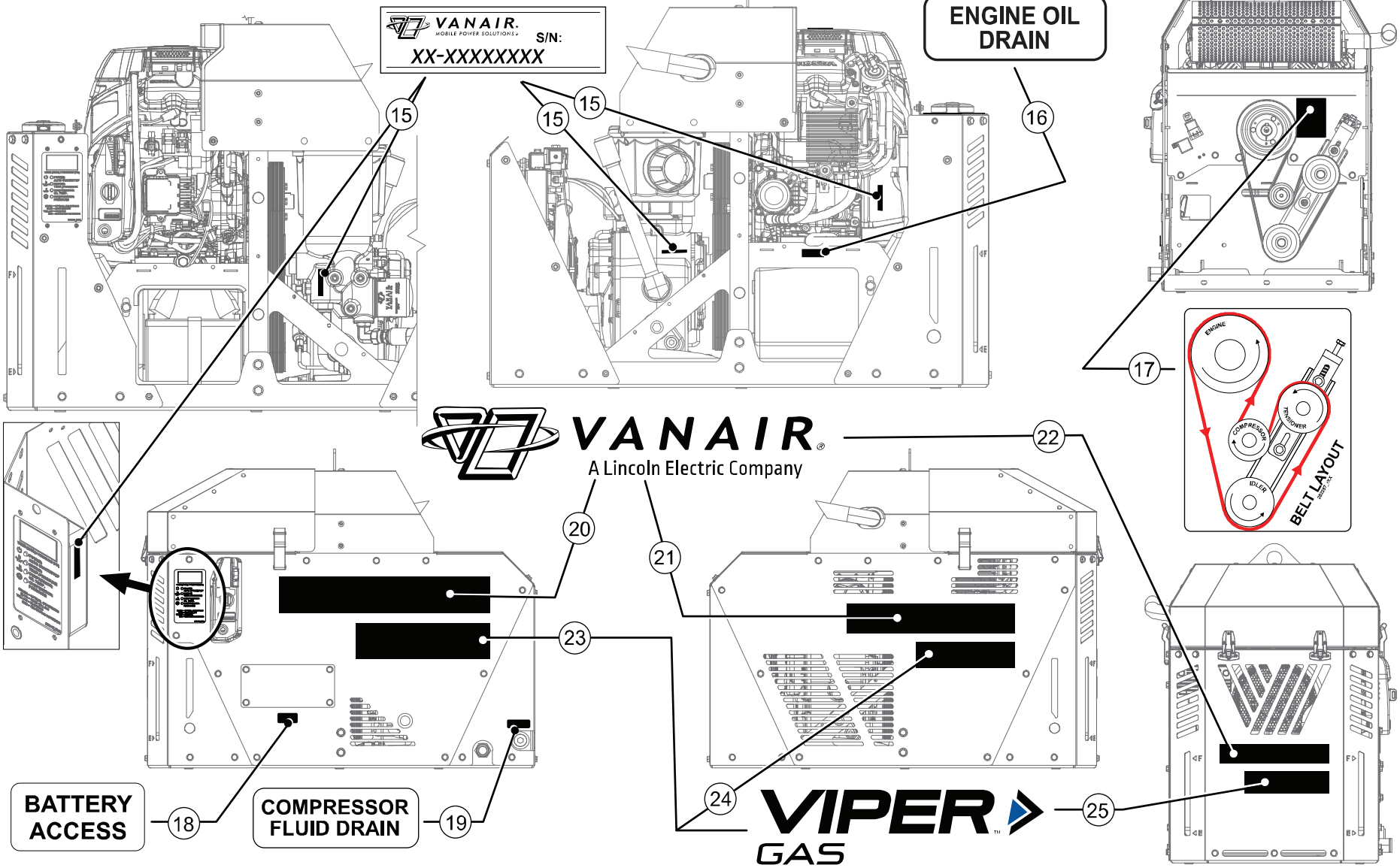

6110146ID_r2

VANAIR® MANUFACTURING, INC.
A Lincoln Electric Company
(844) VAN-SERV • vanair.com

7.11 DECAL LOCATION/IDENTIFICATION - 2 OF 2

ITEM	DESCRIPTION	PART NUMBER	QTY	SET 281699	SHEET 281700
15	DECAL, VANAIR SERIAL TAG (MODEL/SERIAL # ONLY) 1 OF 3	281373	3		
16	DECAL, ENGINE OIL DRAIN	275053	1	-	X
17	DECAL, BELT LAYOUT GV3	282287	1	-	X
18	DECAL, BATTERY ACCESS	283980	1	-	X
19	DECAL, COMPRESSOR FLUID DRAIN	275054	1	-	X
20	LOGO, VANAIR HORIZONTAL - (21.3 X 3.7)	275056-C	1	X	-
21	LOGO, VANAIR HORIZONTAL - (17 X 3)	275056-C	1	X	-
22	LOGO, VANAIR HORIZONTAL - WHTE (11 X 1.9)	275056-D	1	X	-
23	LOGO, VIPER HORIZONTAL (13.6 X 3.6)	275037-A	1	X	-
24	LOGO, VIPER HORIZONTAL (10 X 2.6)	275037-A	1	X	-
25	LOGO, VIPER HORIZONTAL (8.5 X 2.2)	275037-D	1	X	-

PLEASE NOTE: WHEN ORDERING PARTS, INDICATE MACHINE SERIAL NUMBER.

⚠ WARNING

DO NOT REMOVE OR COVER ANY SAFETY DECAL. Replace any safety decal that becomes damaged or illegible.

7.12 WIRING DIAGRAM - 1 OF 2

WIRING INFORMATION

SYSTEM	WIRE #	DESCRIPTION	+/-
ENGINE	1	BATTERY GND	-
	2	12V: CONSTANT (BATTERY)	+
	3	12V: SWITCHED IN	+
	4	12V: SWITCHED OUT	+
	5	STARTER	+
	6	START RELAY	+
	7	ENGINE KILL (OIL PRESSURE)	-
	8	CONTROLLER CLEAN GND IN	-
COMPRESSOR	12	INLET SOL	+
	13	FAN	+
	14	DUAL PRESSURE (GROUND)	-
	15	DUAL PRESSURE (SIGNAL)	-
CONTROLS	21	COMMON CHASSIS GND OUT (A)	-
	22	CAN_L	
	23	CAN_H	
	24	VOLUME/SPEED SIGNAL	
	25	COMPR. TEMP SENSOR SIGNAL	
	26	COMPR. PRESSURE SENSOR SIGNAL	
	27	COMPR. TEMP SENSOR CLEAN GND	-
	28	COMPR. PRESSURE SENSOR CLEAN GND	-
	29	COMMON 5V	+
	31	COMMON CHASSIS GND OUT (B)	-
	32	FAN RELAY	+

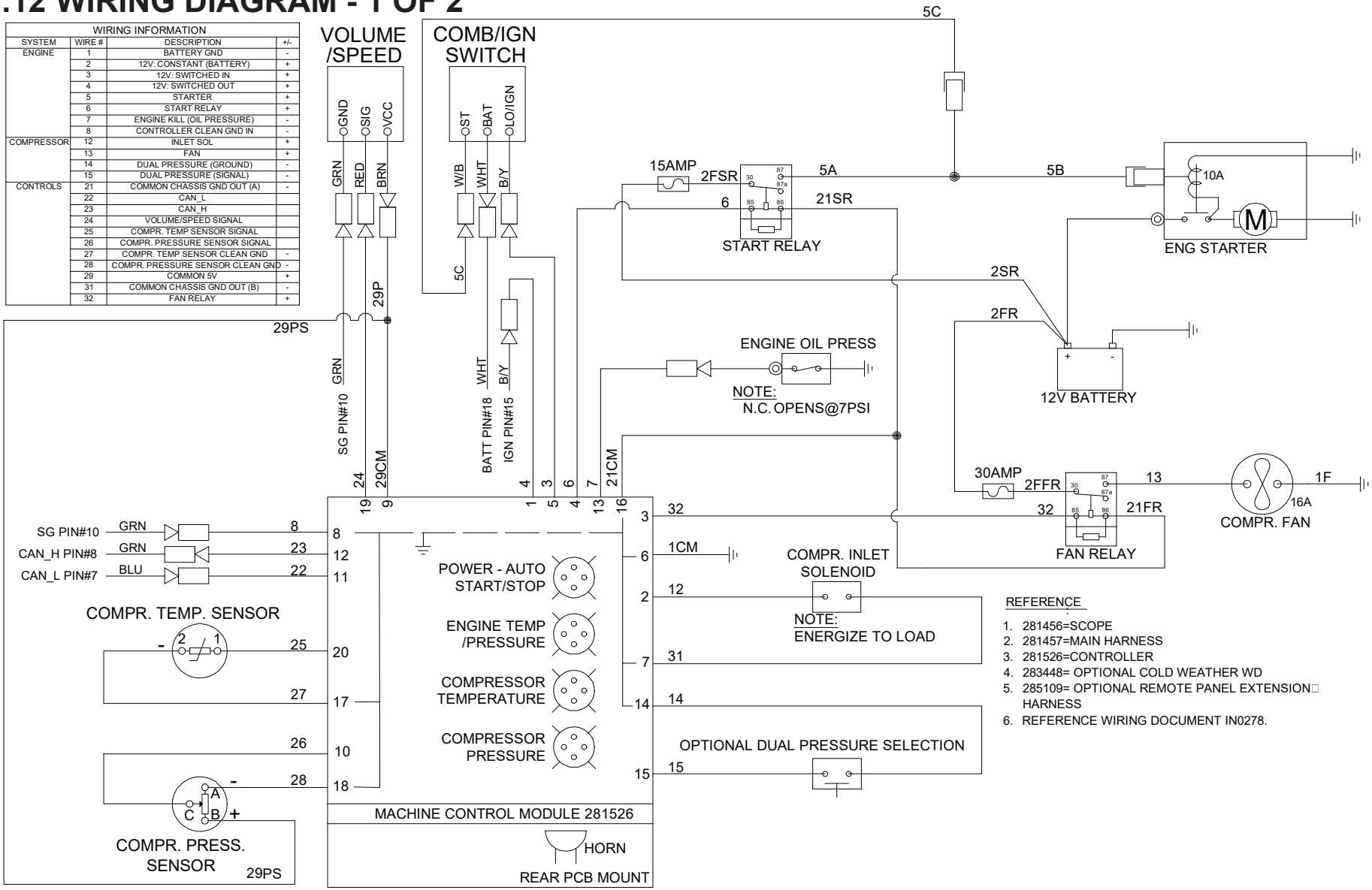

REFERENCE

1. 281456=SCOPE
2. 281457=MAIN HARNESS
3. 281526=CONTROLLER
4. 283448= OPTIONAL COLD WEATHER WD
5. 285109= OPTIONAL REMOTE PANEL EXTENSION HARNESS
6. REFERENCE WIRING DOCUMENT IN0278.

281458_r3_1

VANAIR® MANUFACTURING, INC.
A Lincoln Electric Company
(844) VAN-SERV • vanair.com

7.12 WIRING DIAGRAM - 2 OF 2

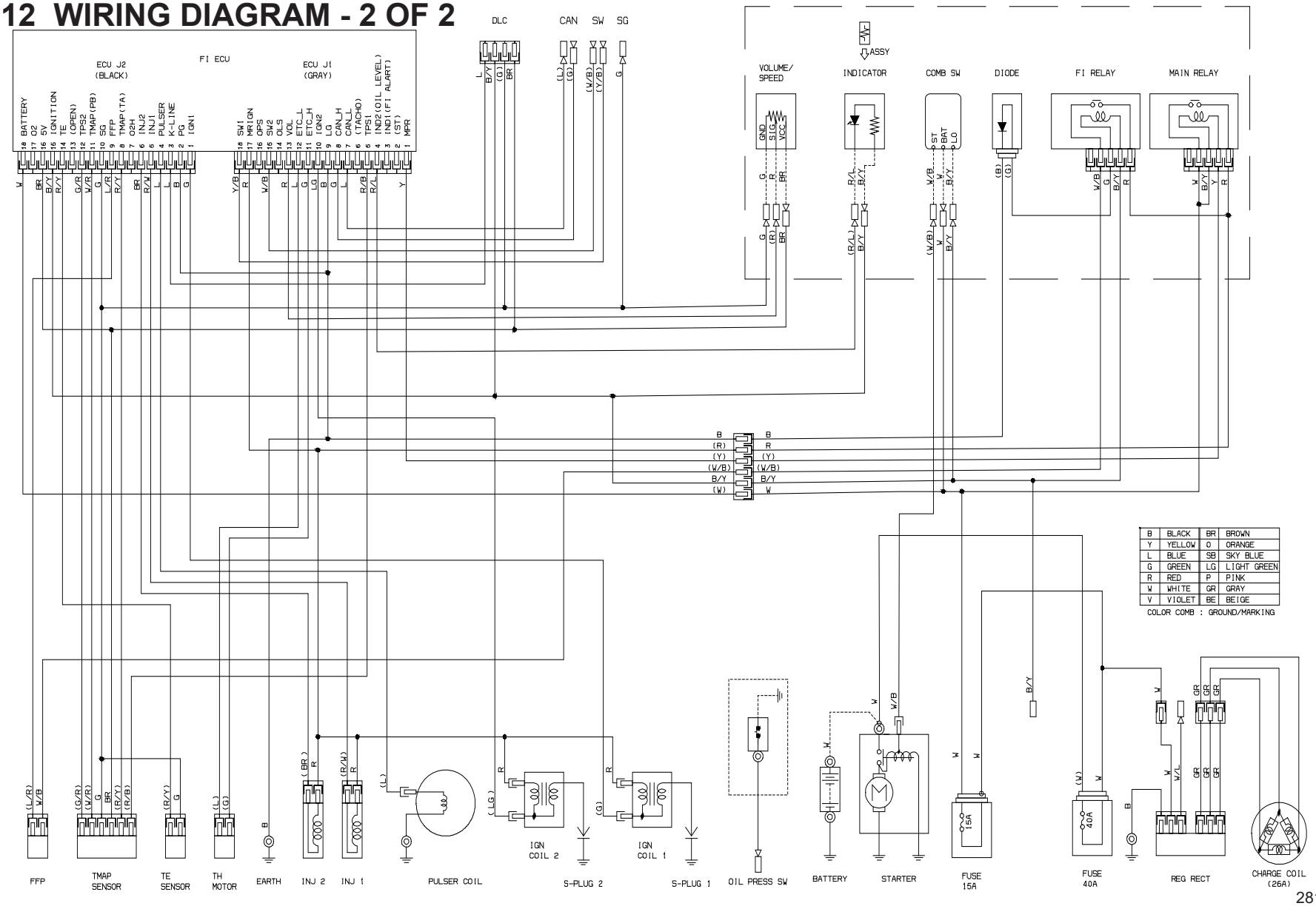

281458_r3_2

7.13 WIRING DIAGRAM - COLD WEATHER 12V (OPTIONAL)

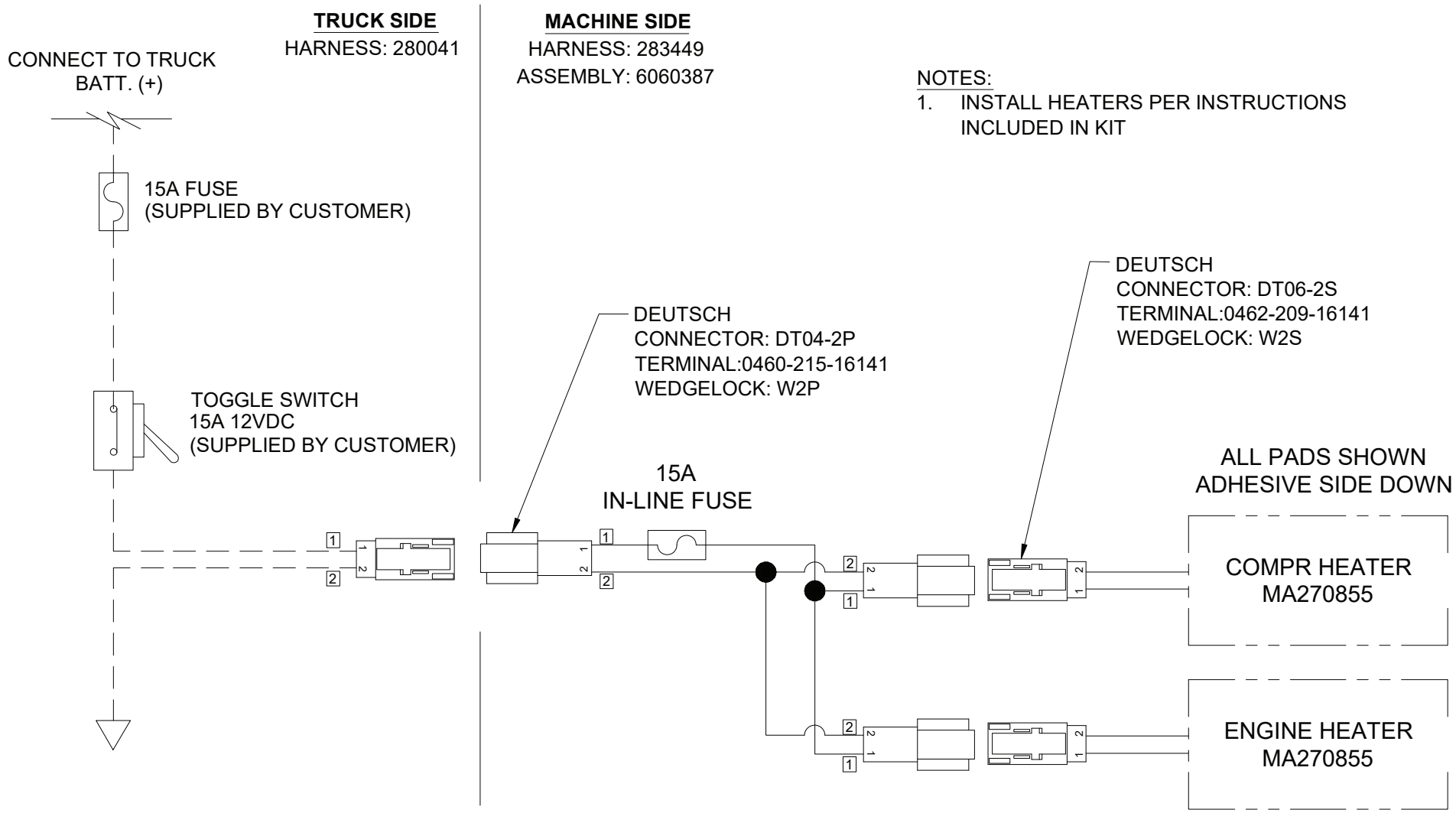

283448_r1

VANAIR® MANUFACTURING, INC.
A Lincoln Electric Company
(844) VAN-SERV • vanair.com

7.14 SCHEMATIC FLOW DIAGRAM VSE WITH INLET

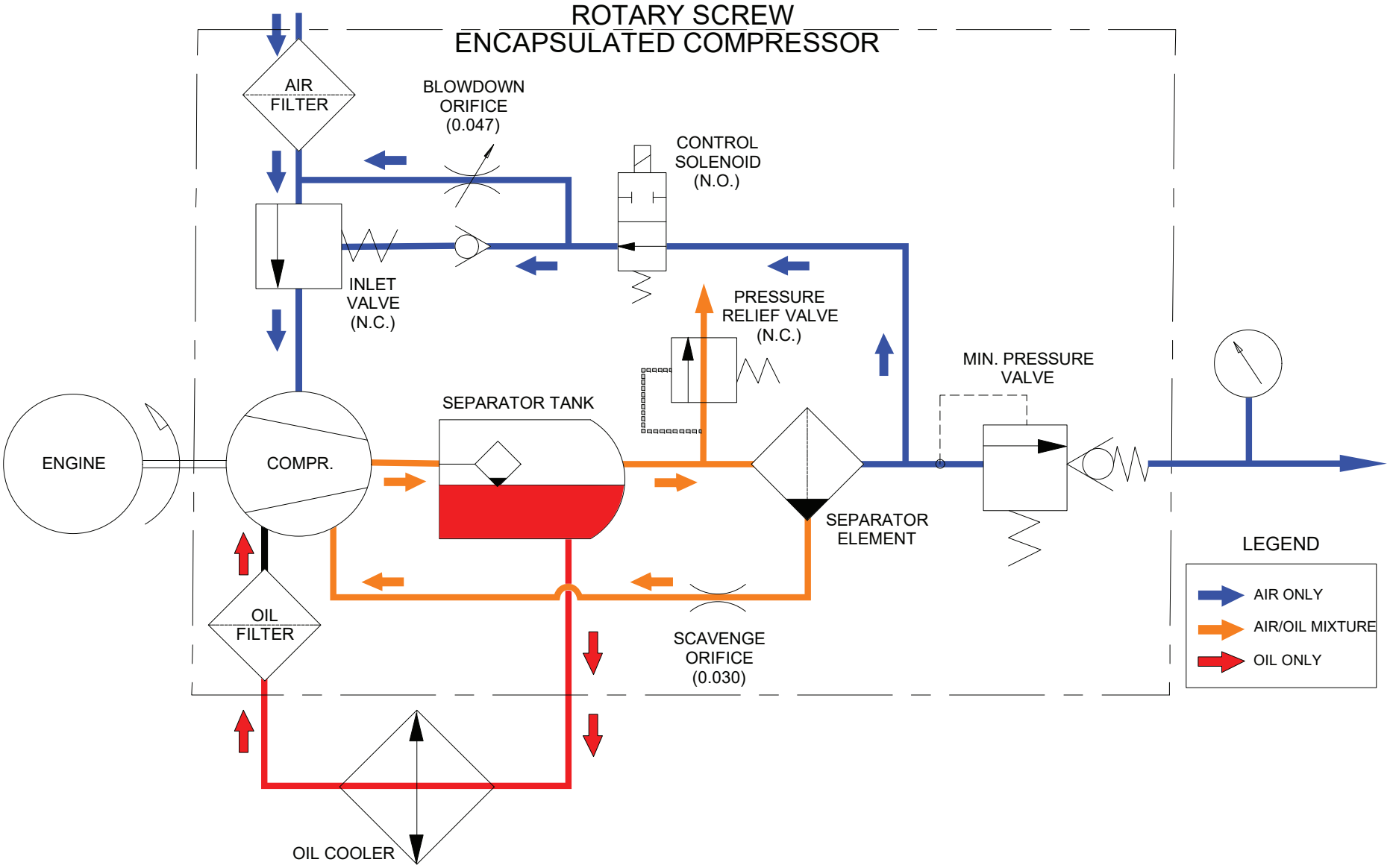

283144_r0

7.15 HOSE INSTALLATION GUIDE

HOSE LAYOUT CONSIDERATION	WRONG	RIGHT	HOSE LAYOUT CONSIDERATION	WRONG	RIGHT
1. Hose is weakened when installed in twisted position. Pressure in twisted hose tends to loosen fitting connections. Design so that machine motion produces bending rather than twisting.	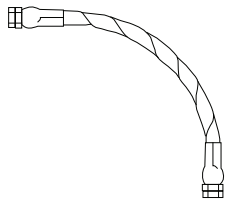	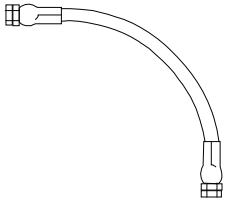	4. Use elbows or other adapters as necessary to eliminate excess hose length and to insure neater installation for easier maintenance.	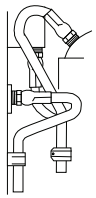	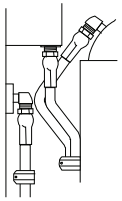
2. Ample bend radius should be provided to avoid collapsing of line and restriction of flow.			5. When hose assembly is installed in a flexing application, remember that metal hose fittings are not part of the flexible portion. Allow ample free length for flexing.		
3. Exceeding minimum bend radius will greatly reduce hose assembly life.	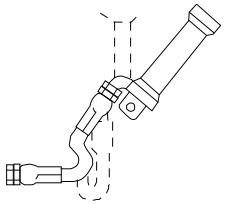	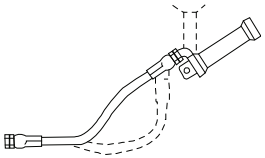	6. When properly routing, use clamps to secure the hose in its proper position.	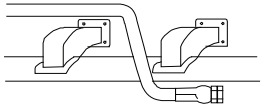	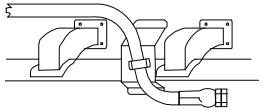

TABLE 7B: MAINTENANCE TRACKING LOG

DATE	DESCRIPTION OF MAINTENANCE	PART(S) REPLACED

BLANK PAGE

BLANK PAGE

VANAIR®

A Lincoln Electric Company

Vanair® Manufacturing, Inc.
A Lincoln Electric Company

10896 West 300 North
Michigan City, IN 46360
Telephone (toll free): (800) 526-8817
Service (toll free): (844) VAN-SERV
(844) 826-7378
Telephone: (219) 879-5100
Service Fax: (219) 879-5335
Parts Fax: (219) 879-5340
Sales Fax: (219) 879-5800
vanair.com

GV3H-B55	GV3H-B60CR	GV3H-B70W
GV3H-B55C	GV3H-B60R	GV3H-B80
GV3H-B55CR	GV3H-B60W	GV3H-B80C
GV3H-B55R	GV3H-B70	GV3H-B80CR
GV3H-B55W	GV3H-B70C	GV3H-B80R
GV3H-B60	GV3H-B70CR	GV3H-B80W
GV3H-B60C	GV3H-B70R	

Printed in the U.S.A.

Specifications subject to
change without prior notice

JULY 14, 2025